9 Separate parts picture and list

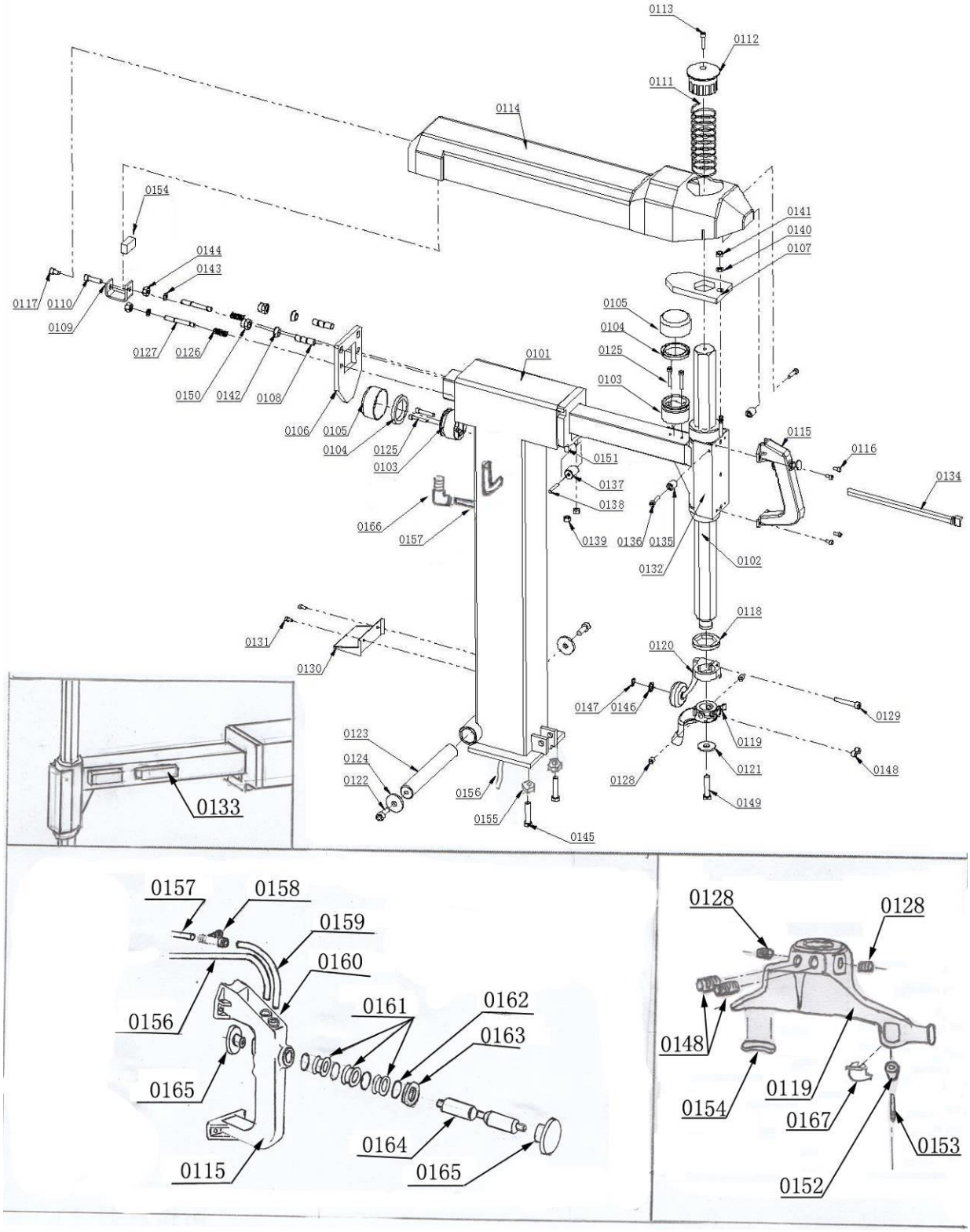

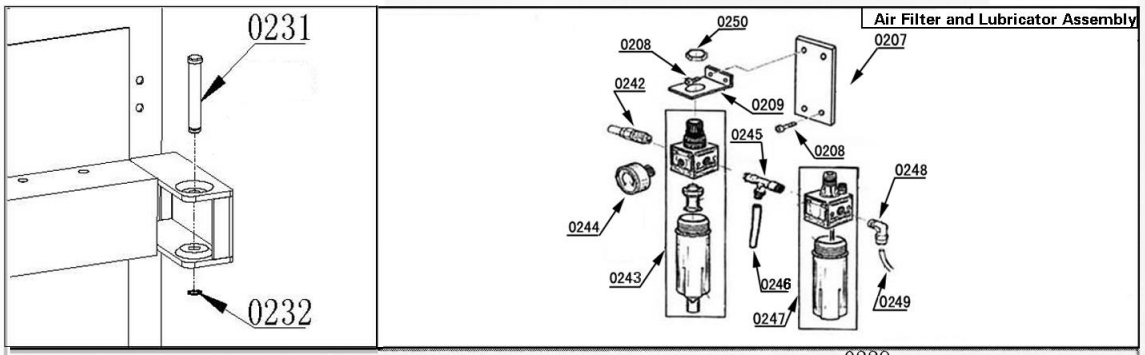
0231
0232
Air Filter and Lubricator Assembly
0250
0208
0207
0242
0209
0245
0208
0248
0244
0243
0246
0247
0249

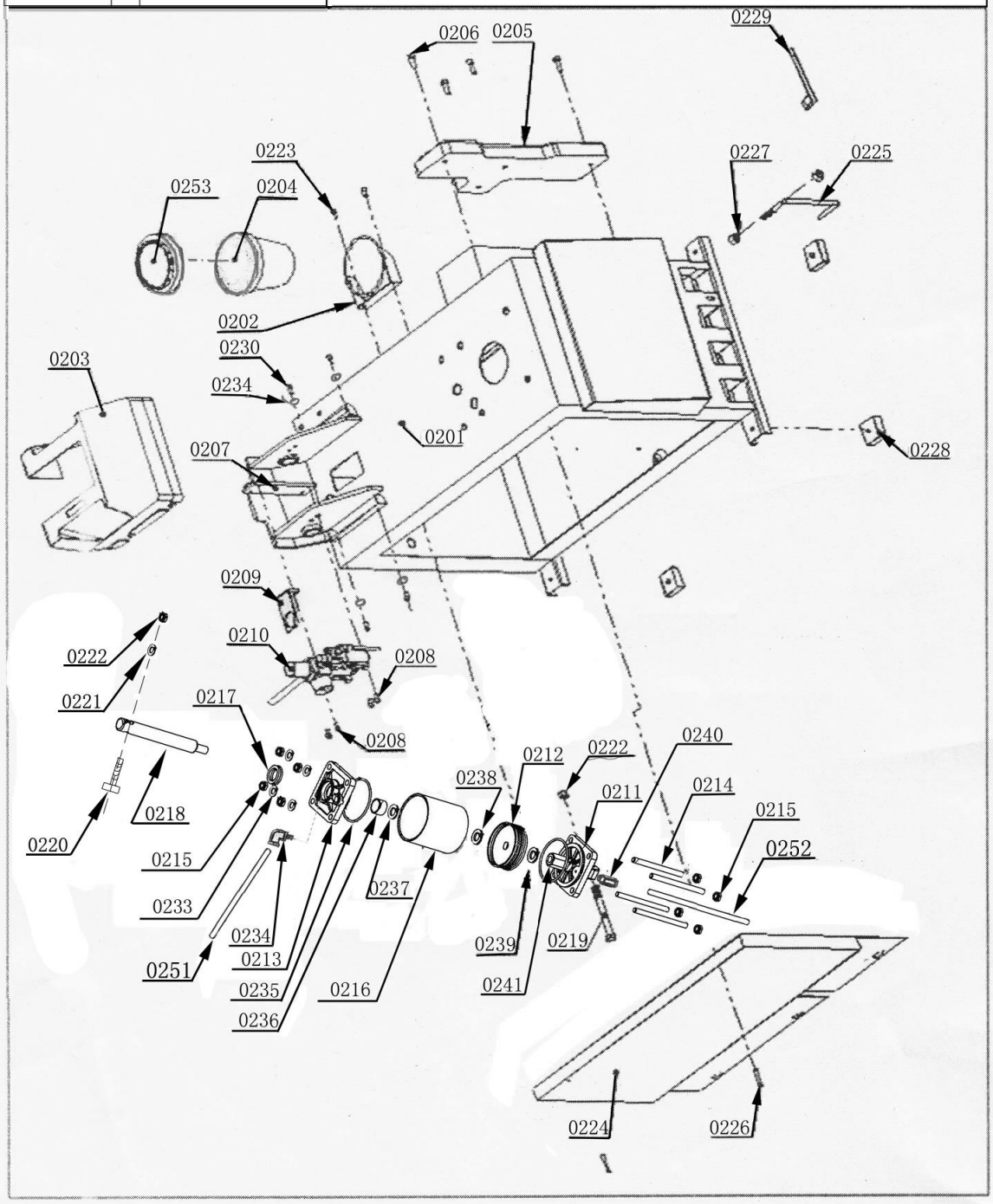
0206
0205
0229
0223
0227
0225
0253
0204
0202
0230
0203
0234
0201
0228
0207
0209
0210
0208
0222
0221
0217
0208
0212
0222
0240
0238
0211
0214
0218
0215
0220
0215
0252
0233
0237
0234
0239
0219
0251
0213
0241
0235
0216
0236
0224
0226

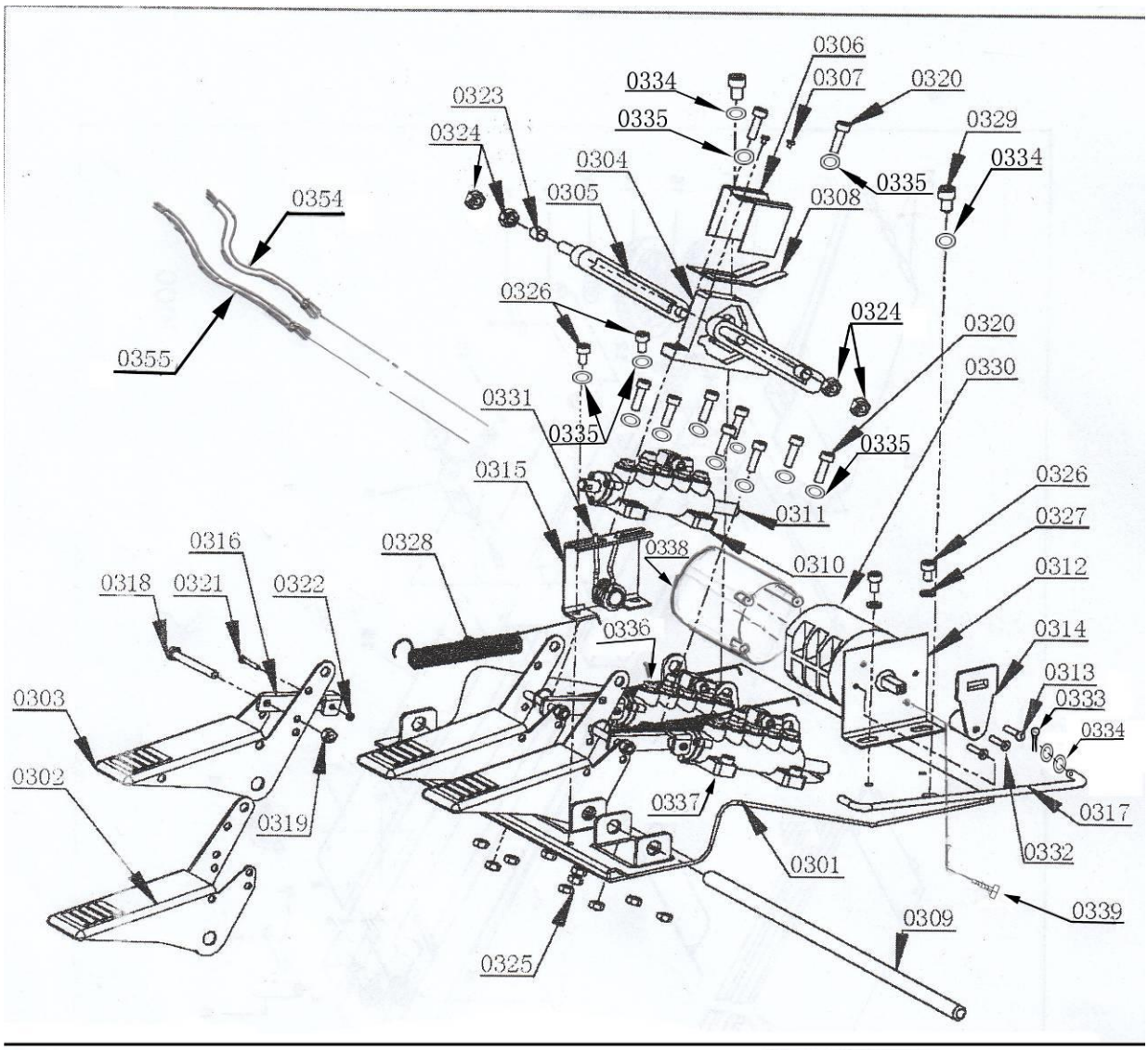
0306
0334
0307
0320
0323
0335
0329
0324
0334
0304
0335
0354
0305
0308
0326
0324
0320
0355
0330
0331
0335
0335
0315
0326
0311
0327
0316
0328
0338
0310
0312
0318
0321
0322
0336
0314
0313
0303
0333
0334
0302
0337
0317
0319
0332
0301
0339
0309
0325

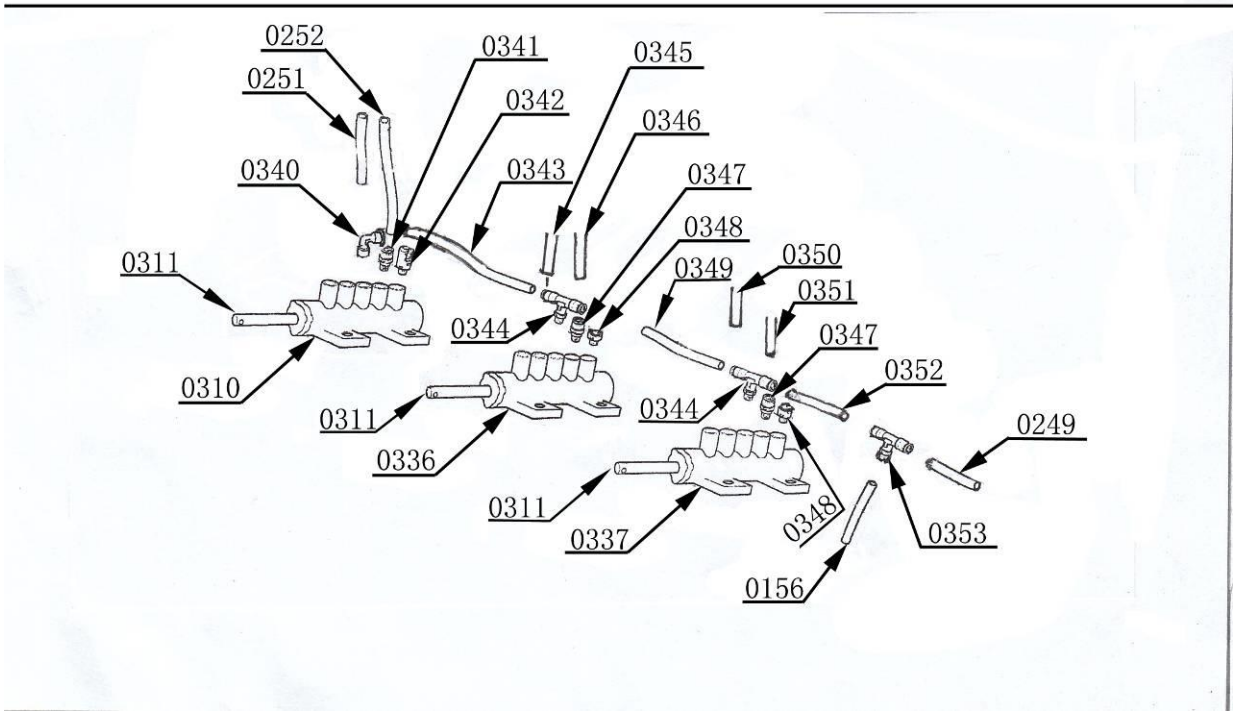
0252
0341
0345
0251
0342
0346
0340
0343
0347
0348
0311
0350
0349
0351
0344
0347
0352
0310
0311
0344
0249
0336
0311
0348
0353
0337
0156

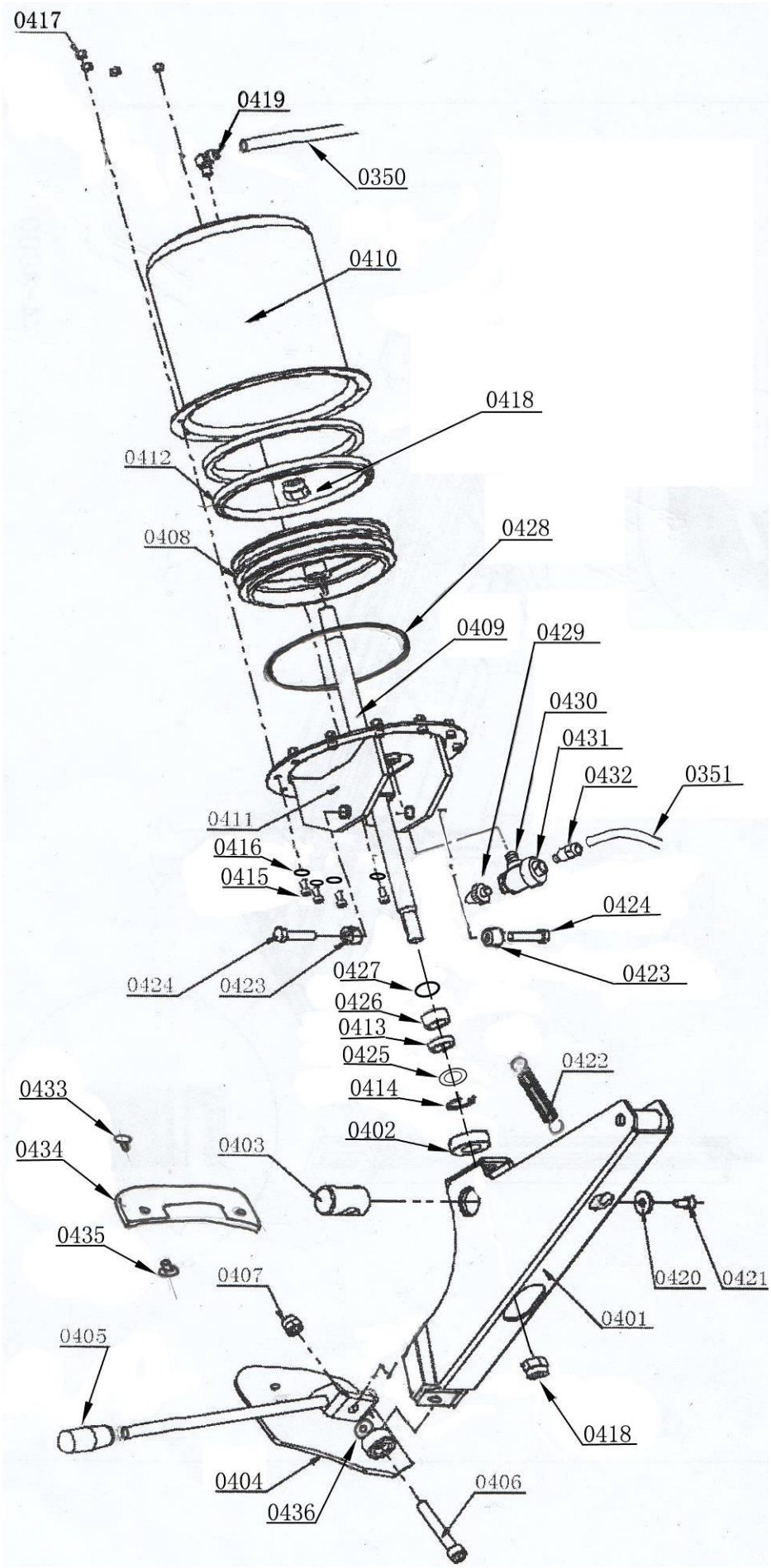
0417
0419
0350
0410
0418
0412
0408
0428
0409
0429
0430
0431
0432
0351
0411
0416
0415
0424
0424
0423
0423
0427
0426
0413
0425
0422
0414
0433
0402
0434
0403
0435
0420
0421
0407
0401
0405
0418
0404
0406
0436

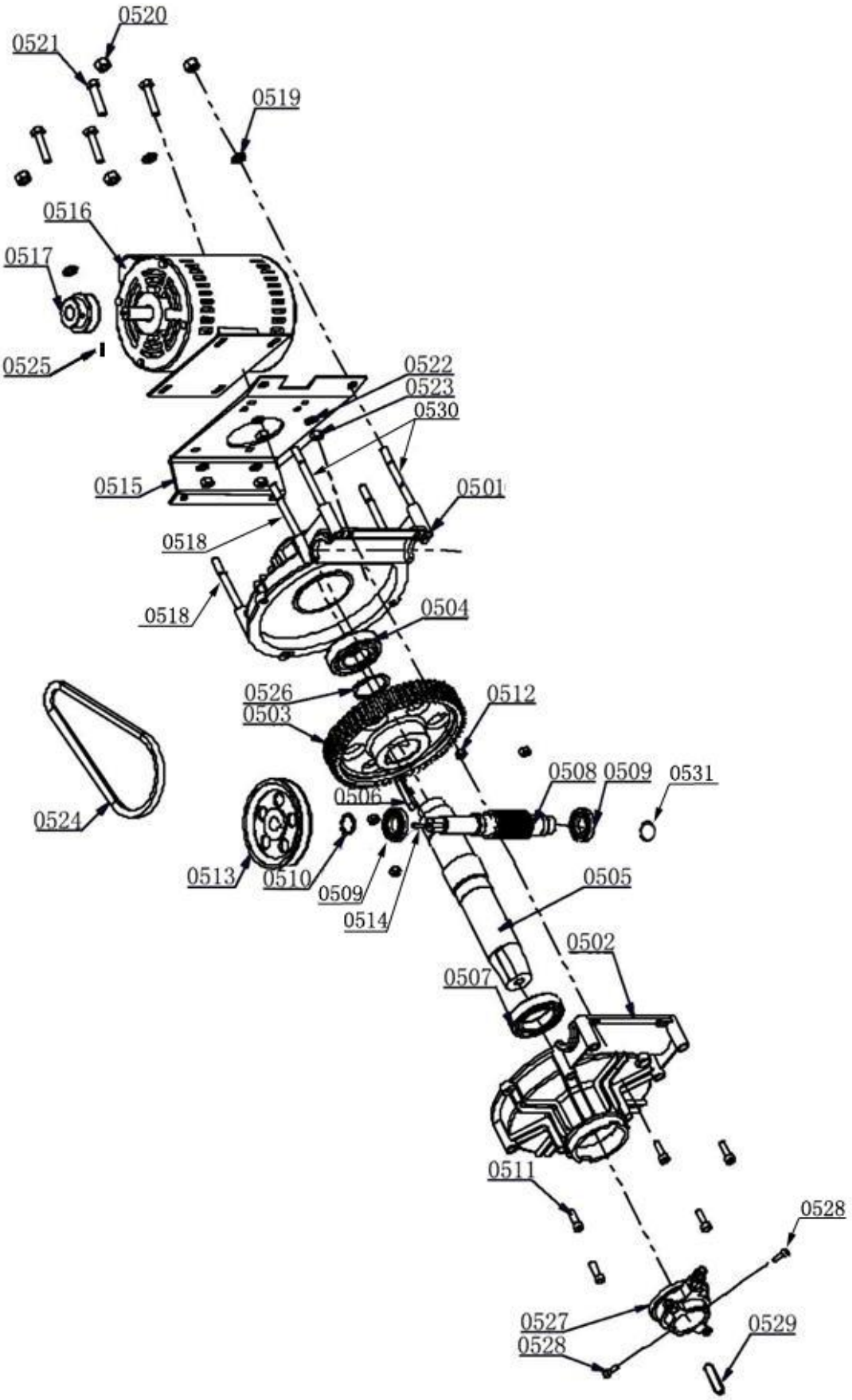
0520
0521
0519
0516
0517
0525
0522
0523
0530
0515
0501
0518
0518
0504
0526
0503
0512
0508
0509
0531
0506
0524
0513
0510
0509
0514
0505
0502
0507
0511
0528
0527
0528
0529

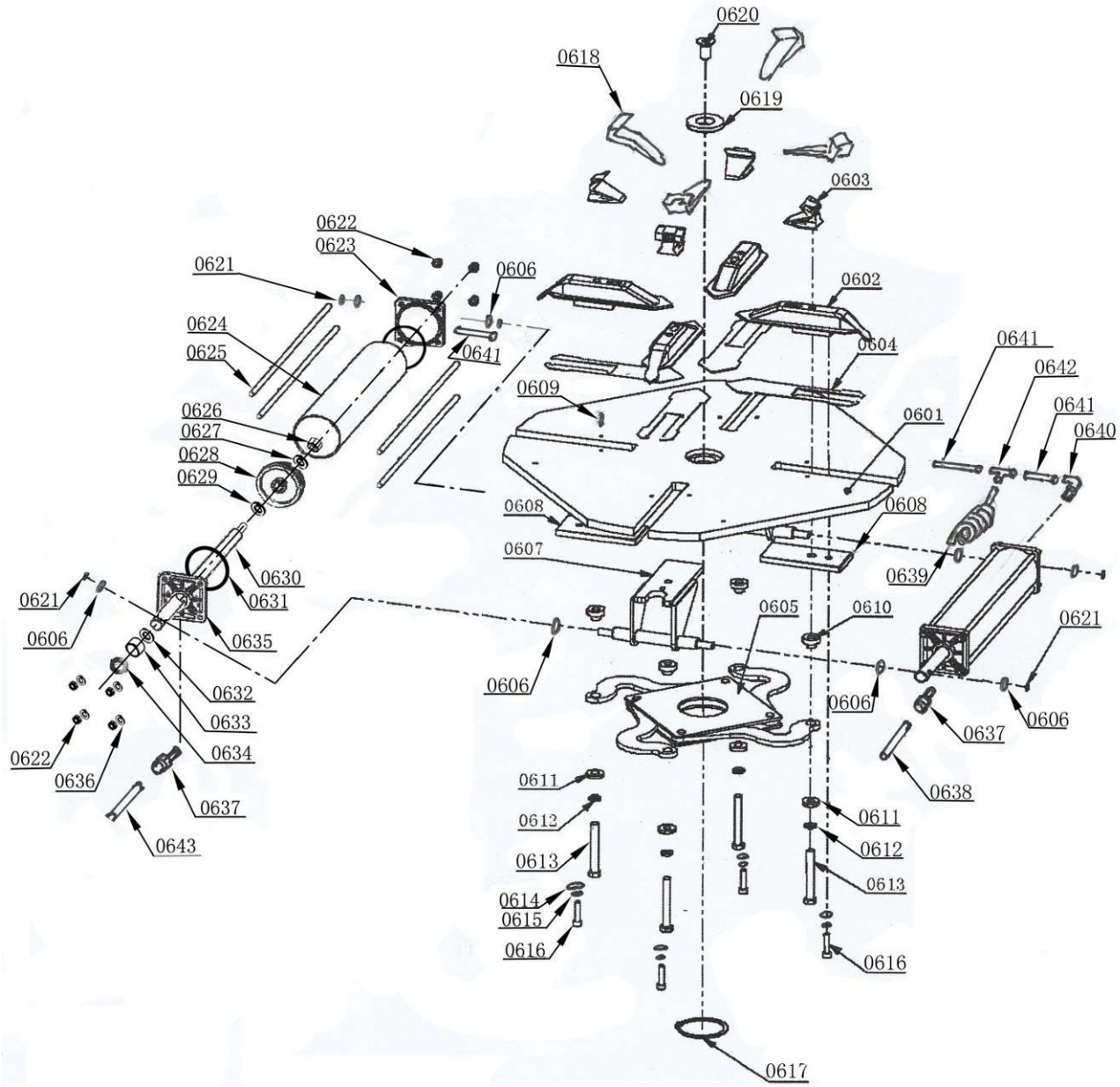
0620
0618
0619
0603
0622
0623
0621
0606
0602
0624
0625
0641
0604
0641
0642
0609
0641
0626
0627
0601
0640
0628
0629
0608
0608
0607
0630
0639
0621
0631
0605
0610
0621
0606
0635
0606
0606
0632
0606
0633
0637
0634
0622
0636
0638
0611
0637
0611
0612
0612
0643
0613
0613
0614
0615
0616
0616
0617

No.	Sequ.No.	Name	Qua.	Spec.	No.	Sequ.No	Name	Qua.	Spec.
1	0101	Vertical arm	1		33	0133	Limit washer	1	
2	0102	Hexangular shaft of vertical arm	1		34	0134	Pipe safety	1	
3	0103	Valve for locking	2		35	0135	Block of horizontal arm safety	2	
4	0104	Y-ring	2	60	36	0136	Round bolt	2	M6X25
5	0105	Valve cover for locking	2		37	0137	Rolled roller	1	
6	0106	Horizontal locking-board	1		38	0138	shaft	1	
7	0107	Vertical locking-board	1		39	0139	Hexagon nut	2	M8
8	0108	Bilateral bolt	2	M12X30	40	0140	Front thread washer	1	
9	0109	Shelf for cover of horizontal arm	1		41	0141	Six-angular bolt	1	M8
10	0110	Round bolt	1	M8×10	42	0142	pad	2	
11	0111	Hexangular spring	1		43	0143	Flat washer ring	2	D8
12	0112	Hexangular shaft cap	1		44	0144	Six-angular nut	2	M8
13	0113	Round bolt	1	M10×30	45	0145	Six-angular bolt	2	M12X30
14	0114	Horizontal arm safety	1		46	0146	Flat ring	1	D12
15	0115	Switch	1		47	0147	Ring for shaft	1	D12
16	0116	Round bolt	4	M5X10	48	0148	Six angles locking bolt	2	M12
17	0117	Round bolt	1	M8X16	49	0149	Six-angular bolt	1	M10X16
18	0118	Ring for mounting head	1		50	0150	Six-angular nut	2	M12
19	0119	Mounting head	1		51	0151	Six angles locking bolt	2	M8x25
20	0120	Bead pressing roller assembly	1		52	0152	Taper roller	1	
21	0121	Flat ring	1	D10	53	0153	Top thread	1	M6x24
22	0122	Round bolt	2	M10X25	54	0154	Limit rubber washer	1	
23	0123	shaft	1		55	0155	Nut	2	M10
24	0124	Large pad of vertical arm	2	D10	56	0156	PV pipe	1	Φ6
25	0125	Round bolt	4	M6×35	57	0157	PV pipe	1	Φ6
26	0126	Spring of	2		58	0158	Tee joint	1	D6

		hexangular locking board							
27	0127	Stud bolt	2	M8X60	59	0159	PV pipe	1	Φ6
28	0128	Bolt for tightening	2	M10X10	60	0160	Inserting tee joint	2	D6
61	0161	Spacer	3		65	0165	Round nut	2	M6
62	0162	O-ring	3	Φ8x2.65	66	0166	Right angle terminal pipe joint	1	D6
63	0163	Pressing cover	1		67	0167	Protect slice for tire	1	
64	0164	Valve rod	1						
No.	**Sequ.No.**	**Name**	**Quan.**	**Spec.**	**No.**	**Sequ.No.**	**Name**	**Quan.**	**Spec.**
1	0201	Cabinet	1		27	0227	Six-angular nut	2	M8
2	0202	Shelf for lubricant	1		28	0228	Rubber washer	4	
3	0203	Cover of vertical arm base	1		29	0229	lever	1	
4	0204	Lubricant box	1		30	0230	Round bolt	4	M5X10
5	0205	Tire protecting pad	1		31	0231	Jointing shaft of bead breaker	1	
6	0206	Round bolt	4	M6X16	32	0232	Spring ring for shaft	1	D14
7	0207	Block for air filter lubricator	1		33	0233	Flat washer ring	4	D8
8	0208	Round bolt	4	M6X16	34	0234	Inserting right angular pipe joint	1	D8
9	0209	Jointing block for air filter lubricator	1		35	0235	O-ring	2	d 75x1.8
10	0210	Air filter lubricator	1		36	0236	Guide cover	1	d 20
11	0211	lower cover of cylinder	1		37	0237	O-ring	1	D24x2.4
12	0212	Piston of cylinder	1		38	0238	Inner washer ring	1	
13	0213	Upper cover of cylinder	1		39	0239	Out washer ring	1	
14	0214	Threaded rod with double heads	4		40	0240	Inserting pipe joint	1	D8
15	0215	Six-angular nut	8	M8	41	0241	Nut	1	M12
16	0216	Cylinder body	1		42	0242	Air supply joint	1	
17	0217	Y-ring	1	D28	43	0243	Air filter and lubricator	1	
18	0218	Piston-rods	1		44	0244	Air pressure	1	

							gauge		
19	0219	Six-angular bolt	1	M12X120	45	0245	Tee joint	1	
20	0220	Six-angular bolt	1	M12X60	46	0246	Pipe	1	Φ8
21	0221	Spring washer ring	2	D12	47	0247	Air filter and lubricator	1	
22	0222	Six-angular nut	2	M12	48	0248	Right angle terminal pipe joint	1	
23	0223	Round bolt	2	M5X10	49	0249	Pipe	1	Φ8
24	0224	Left block	1		50	0250	Nut	1	
25	0225	stick	1		51	0251	Pipe	1	Φ6
26	0226	Round bolt	2	M5X40	52	0252	Pipe	1	Φ6
					53	0253	Case cover	1	

No.	**Sequ.No.**	**Name**	**Quan.**	**Spec.**	**No.**	**Sequ.No.**	**Name**	**Quan.**	**Spec.**
1	0301	Bottom board of foot pedal	1		26	0326	Round bolt	2	M6X10
2	0302	Left foot pedal	3		27	0327	Flat washer ring	2	D6
3	0303	Right foot pedal	1		28	0328	Spring of foot pedal	3	
4	0304	Slide assembly	1		29	0329	Round bolt	2	M8X10
5	0305	Slide rod	2		30	0330	Universal switch	1	
6	0306	Protector of slide	1		31	0331	Spring	1	
7	0307	bolt	2	M3X5	32	0332	Round bolt	1	M4x10
8	0308	Slide spring	1		33	0333	Pin	2	D2x20
9	0309	Shaft of foot pedal	1		34	0334	Flat washer ring	6	D8
10	0310	valve	1		35	0335	Flat washer ring	16	D6
11	0311	Valve rod	3		36	0336	Valve	1	
12	0312	Switch base	1		37	0337	Valve	1	
13	0313	bolt	2	M5X20	38	0338	Switch protector	1	
14	0314	Jointing flake	1		39	0339	Bolt	2	3x12
15	0315	Spring base	1		35	0335	Flat washer ring	16	D6
16	0316	Foot pedal joint spacer	3		36	0336	Valve	1	
17	0317	Jointing rod of foot pedal	1		37	0337	Valve	1	
18	0318	Six-angular bolt	3	M6X55	38	0338	Switch protector	1	
19	0319	Six-angular nut	3	M6	39	0339	Bolt	2	3x12
20	0320	Round bolt	14	M6X15	40	0340	Terminal pipe joint	1	D8
21	0321	Round bolt	3	M4X25	41	0341	Terminal pipe joint	2	D6
22	0322	Six-angular nut	3	M4	42	0342	**silencer**	2	
23	0323	pad	2		43	0343	Pipe	1	Φ8
24	0324	Six-angular nut	4	M8	44	0344	Tee joint	2	D8
25	0325	Six-angular nut	14	M6	45	0345	Pipe	1	Φ8

No.	Sequ. No.	Name	Quan.	Spec.	No.	Sequ.No.	Name	Quan.	Spec.
46	0346	Pipe	1	Φ8	52	0352	Pipe	1	Φ8
47	0347	Right angle terminal pipe joint	4	D8	53	0353	Joint	1	D8,D6
48	0348	**silencer**	4		54	0354	Lines of motor	1	
49	0349	Pipe	1	Φ8	55	0355	Lines of power	1	
50	0350	Pipe	1	Φ8	56	0156	Pipe	1	Φ6
51	0351	Pipe	1	Φ8	57	0249	Pipe	1	Φ8

No.	Sequ.No.	Name	Quan.	Spec.
1	0401	Arm of bead breaker	1	
2	0402	Washer of bead breaker	1	
3	0403	Axis of bead breaker	1	
4	0404	Bead breaker	1	
5	0405	Spanner	1	
6	0406	Round bolt	1	M12X120
7	0407	Six-angular nut	1	M12
8	0408	Piston of big cylinder	1	
9	0409	Piston-rods of big cylinder	1	
10	0410	Cylinder body	1	
11	0411	Cover of big cylinder	1	
12	0412	Y-ring	2	186
13	0413	Y-ring	1	d 20xD30
14	0414	Spring spacer	1	D30
15	0415	Round bolt	12	M6X15
16	0416	Flat washer ring	12	D6
17	0417	Six-angular nut of flange for tightening	12	M6
18	0418	Six-angular nut	2	M16
19	0419	Right angular joint	1	D8
20	0420	Large ring	1	
21	0421	Round bolt	1	M8X10
22	0422	Spring of arm of bead breaker	1	
23	0423	pad	2	
24	0424	Round bolt	2	M12X30
25	0425	Flat washer ring	1	
26	0426	Guide cover	1	d20
27	0427	O-ring	1	d20x2.4
28	0428	O-ring	1	D184x3.5
29	0429	**silencer**	1	
30	0430	Inner joint	1	
31	0431	Quick exhausted valve	1	
32	0432	Right angle terminal pipe joint	1	D8

33	0433	Pressing button	1	
34	0434	Protector of bead breaker	1	
35	0435	Pressing button	1	
36	0436	Adjusting washer	1	
37	0350	Pipe	1	Φ8
38	0351	Pipe	1	Φ8

No.	Sequ.No.	Name	Quan.	Spec.
1	0501	Lower cover of gear box	1	
2	0502	Upper cover of gear box	1	
3	0503	Gear box	1	
4	0504	Bearing	1	
5	0505	Axis of gear box	1	
6	0506	Pin	1	
7	0507	Bearing	1	
8	0508	Rod gear box	1	
9	0509	Bearing	2	
10	0510	Seal-ring for shaft	1	D26
11	0511	Round bolt	5	M8X25
12	0512	Six-angular nut	5	M8
13	0513	Big transfer wheel	1	
14	0514	Pin	1	
15	0515	Shelf for motor	1	
16	0516	Alternator	1	
17	0517	Small transfer wheel	1	
18	0518	Six-angular bolt	4	M10X160
19	0519	Flat washer ring	10	D10
20	0520	Six-angular nut	10	M10
21	0521	Six-angular bolt	4	M10X40
22	0522	Flat washer ring	8	D10
23	0523	Six-angular nut	4	M10
24	0524	Transfer belt	1	
25	0525	Six-angular round screw for tightening	1	M8X10
26	0526	Spring spacer for shaft	1	D50
27	0527	Valve	1	
28	0528	Round bolt	2	M6X15
29	0529	Pin	1	12x8x50
30	0530	Round bolt	2	M10x200
31	0531	Seal-ring	1	

No.	Sequ.No.	Name	Quan.	Spec.
1	0601	turntable	1	
2	0602	Clamp base	4	
3	0603	Clamp	4	
4	0604	Anti-friction flake	4	
5	0605	S-plate	1set	
6	0606	Adjusting washer	8	
7	0607	Joint shelf of cylinder	2	
8	0608	connected board of slide	2	
9	0609	Pin	8	Φ5x10
10	0610	S-plate axis	4	
11	0611	Cover of S-plate axis	4	
12	0612	Ring of ring	4	D12
13	0613	Six-angular bolt	4	M12X95
14	0614	Flat washer ring	4	D8
15	0615	Spring ring	4	D8
16	0616	Round bolt	4	M8x25
17	0617	Spring spacer ring for shaft	1	D75
18	0618	Clamp protectors	4	
19	0619	Blockage for turntable	1	
20	0620	Six-angular nut	1	M16x30
21	0621	Spring spacer ring	4	D12
22	0622	Non-metal nut	16	M8
23	0623	Back cover of cylinder	2	
24	0624	Cylinder body	2	
25	0625	Double heads bolt rod of cylinder	8	
26	0626	Nut	2	M12
27	0627	Out washer ring	2	
28	0628	Rubber piston of cylinder	2	
29	0629	Inner washer ring	2	
30	0630	Piston rod	2	
31	0631	O-ring	4	d 75x1.8
32	0632	O-ring	2	D24x2.4
33	0633	Guide cover	2	d 20
34	0634	Y-ring	2	D28
35	0635	Front cover of cylinder	2	
36	0636	Flat washer ring	8	D8
37	0637	Tee joint	2	D8
38	0638	Pipe	1	Φ8
39	0639	Screw pipe	1	Φ8
40	0640	Right angular pipe joint	2	D8
41	0641	Pipe	2	Φ8
42	0642	Tee joint	1	D8
43	0643	pipe	1	D8