HESHBON®

HESHBON SCISSORS LIFT

Operation & Maintenance Manual

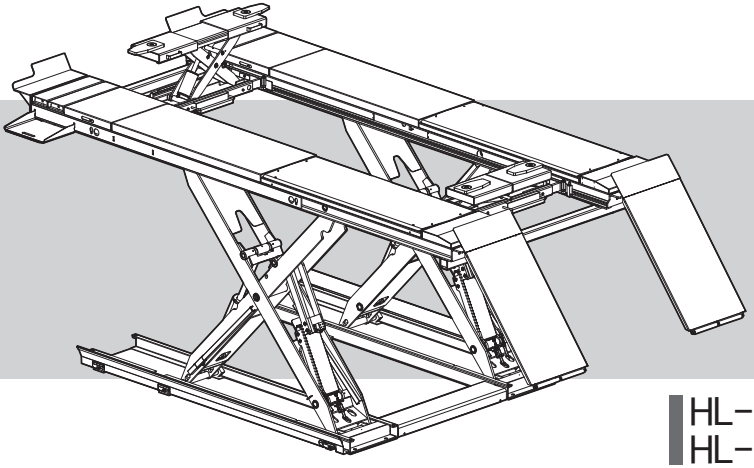

HL-52X
HL-53X

Please read this manual before you get started.
You must read and understand the precautions for safety to protect your safety and any damage to your property.

NOTE TO THE USER

Thank you for purchasing HESHBON CAR LIFT.
Please read this instruction carefully for safe and proper use of the car lift, and keep it handy for future reference.

- This Manual is for model : HL-52X,53X
- As for the assurance of safety in design and construction of car lift, read this Manual first.
- Please make sure that this manual is delivered to end users for their implementation of safety.
- Don't use the car lift in a potentially explosive atmosphere.

ANY PART OF THIS PRINT MUST NOT BE REPRODUCED IN ANY FORM WITHOUT PERMISSION.
THIS PRINT IS SUBJECT TO CHANGE WITHOUT NOTICE.

NO. 53X130701A
Copyright© 2013 Heshbon co.,ltd. All rights reserved.

TABLE OF CONTENTS

Introduction 4
- Features and characteristics 4
- Names of each part are described 6
- Description 8
- Specification 9

Safety 10
- Caution Sticker Layout 10
- Danger/warning/caution 12

Installaion procedures 14
- Checklist before installing 14
- Place of installation (layout) 15
- Installation procedures 17

Operation 19
- Check points before operation 19
- Operation 20
- Driving Operation 21

Maintenance 23
- Equipment maintenance and service 23
- Trouble shooting 27
- Check list and periodic maintenance 28

Appendix

■ This manual was prepared in July 2013 the product specifications contained in this manual are subject to change without notice.

Features and characteristics

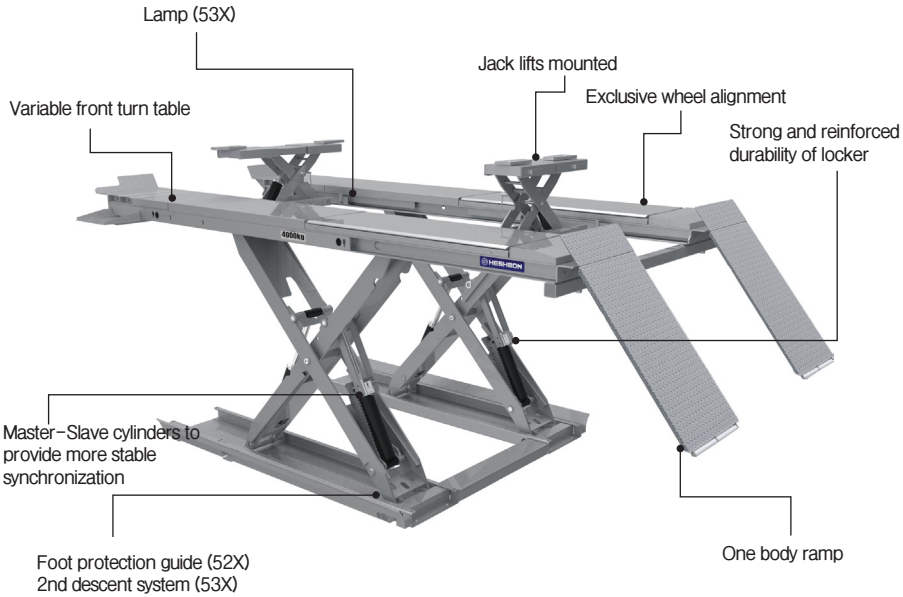

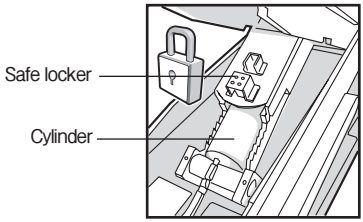

■ Safety locking system

▶Safety locker that is center of link help your safety work.

▶Apply locking sensor to prevent malfunction of the safety locker. (HL-53X)

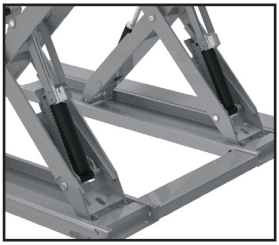

■ Exact sync by Master-Slave cylinder

▶ Heshbon by the Master-Slave cylinder of the advanced technology is realized for exact sync.

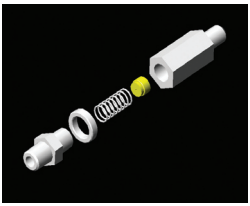

■ Orifice applied

▶ Orifice (hydraulic safety circuit) is applied to maintain stable descending speed even if hydraulic hose is damaged.

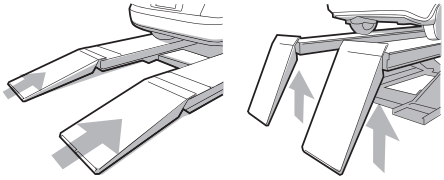

Variable tire stopper

■ One body ramp

▶Ramp is composed as one body type with run way which enables workers to use space efficiently.

■ Lamp : HL-53X

▶Lamp enables workers to work safely under the lift with a light.

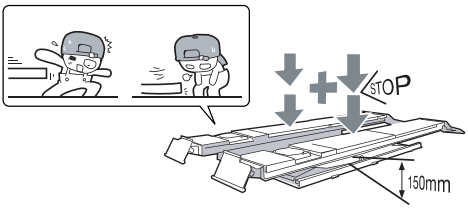

■ 2nd descent system

▶Normal descent stops automatically at 150mm from ground level. The warning buzzer sounds, and the 2nd descent system allows full descent to ground level.

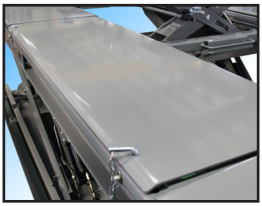

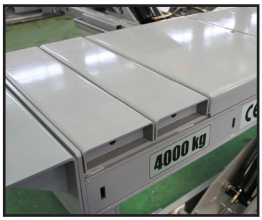

■ Exclusive Wheel Alignment

▶Variable front turn table and rear auto locking slide slip are applied for dedicated wheel alignment.

Names of each part are described

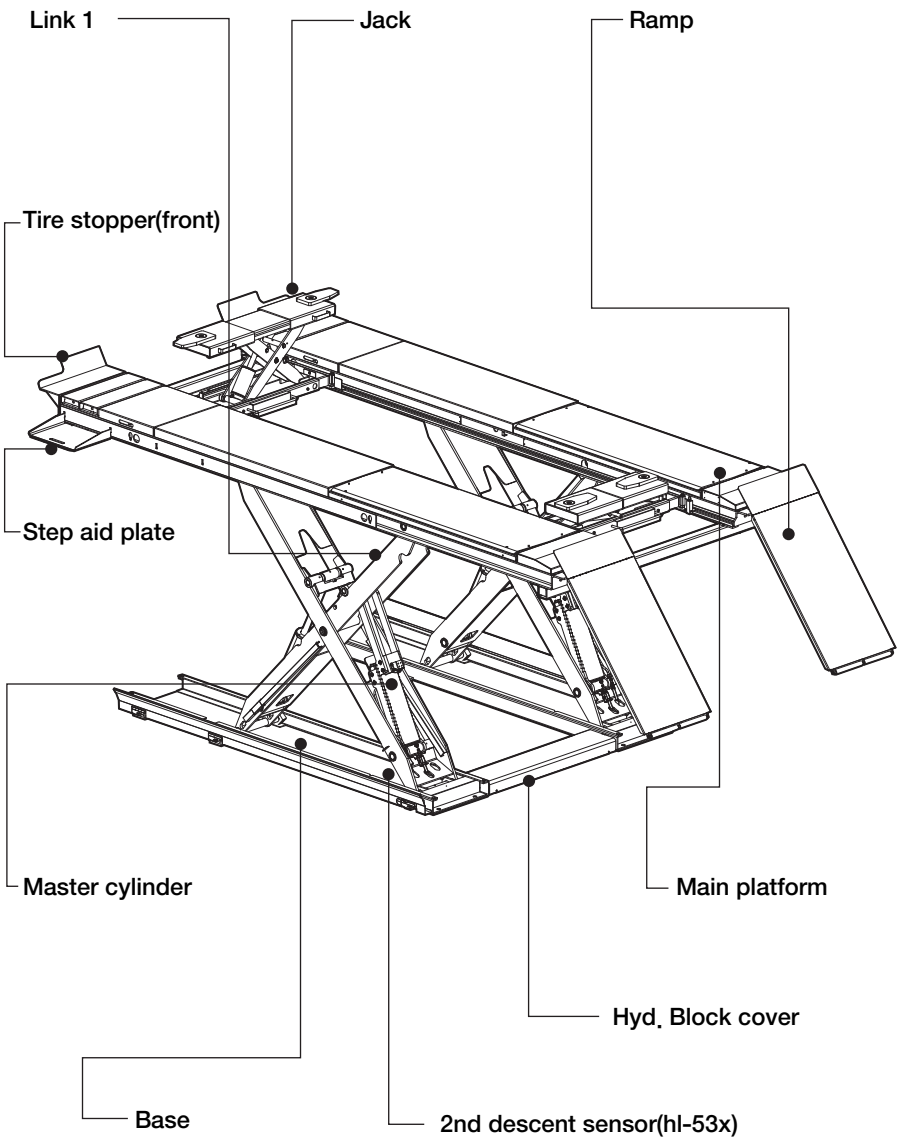

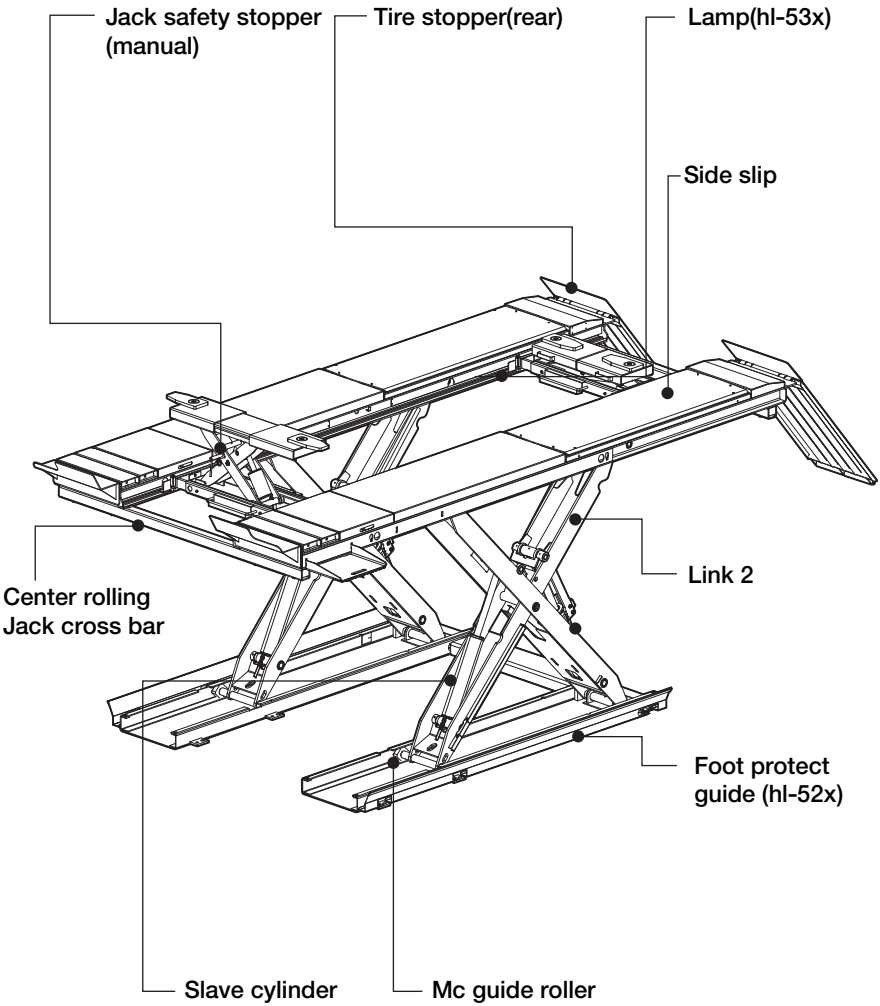
Jack safety stopper
(manual)
Tire stopper(rear)
Lamp(hl-53x)
Side slip
Link 2
Center rolling
Jack cross bar
Foot protect
guide (hl-52x)
Slave cylinder
Mc guide roller

Description

■ HL-52X

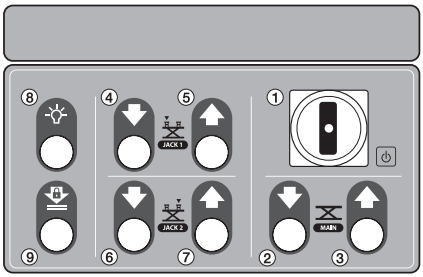

① Main power switch
: Supply or isolate the power of the lift.

② Main descent button
: Descends the main platform.

③ Main ascent button
: Ascends the main platform.

④ Descent button of the auxiliary lift
: Descends the jack1.

⑤ Ascent button of the auxiliary lift
: Ascends the jack1.

⑥ Descent button of the auxiliary lift
: Descends the jack2.

⑦ Ascent button of the auxiliary lift
: Ascends the jack2.

⑧ Lamp

⑨ Main locker (lock the main platform)
: Function of hanging the safety locker on the locker rail.

■ HL-53X

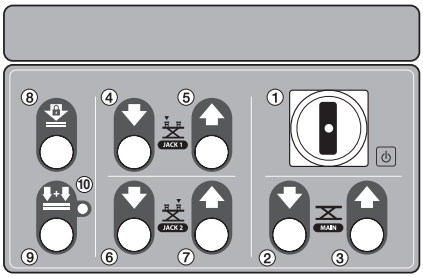

① Main power switch
: Supply or isolate the power of the lift.

② Main descent button
: Descends the main platform.

③ Main ascent button
: Ascends the main platform.

④ Descent button of the auxiliary lift
: Descends the jack1.

⑤ Ascent button of the auxiliary lift
: Ascends the jack1.

⑥ Descent button of the auxiliary lift
: Descends the jack2.

⑦ Ascent button of the auxiliary lift
: Ascends the jack2.

⑧ Main locker (lock the main platform)
: Function of hanging the safety locker on the locker rail.

⑨ 2nd descent button
: When the 2nd descent status of main platform, if you push the number ② descent button with pushing this, platform descends to bottom.

⑩ Status lamp of the locker ability (number 3)
(when green light, locking is enabled)

Specification

Model Name	HL - 52X, 53X
Capacity	Main Lift : 4,000 Kg / Aux.Lift : 2,000 Kg
Used Hydraulic Pressure	240 Kgf/㎠
Overall Max.Height	Main Lift : 1,900 mm / Aux.Lift : 530 mm
Min.Runways Height	Main Lift : 260 mm / Aux.Lift : 200 mm
Stroke	Main Lift : 1,640 mm / Aux.Lift : 330 mm
Lifting Time	Main Lift : 40 ~ 60 sec. / Aux.Lift : 5 ~ 15 sec.
Lowering Time	Main Lift : 35 ~ 45 sec. / Aux. Lift : 10 ~ 30 sec.
Standard Motor	Single phase : 2.5HP x 4P x 220V x 50/60Hz 3 phase : 3HP x 4P x 220/380V x 50/60Hz
Net Weight	About 2,100 kg (HL-52X) / 2,150 kg (HL-53X)
Layout Dimension (L/H/W)	HL-52X : 5,645 X 2,150 X 2,010 mm HL-53X : 5,945 X 2,150 X 2,010 mm

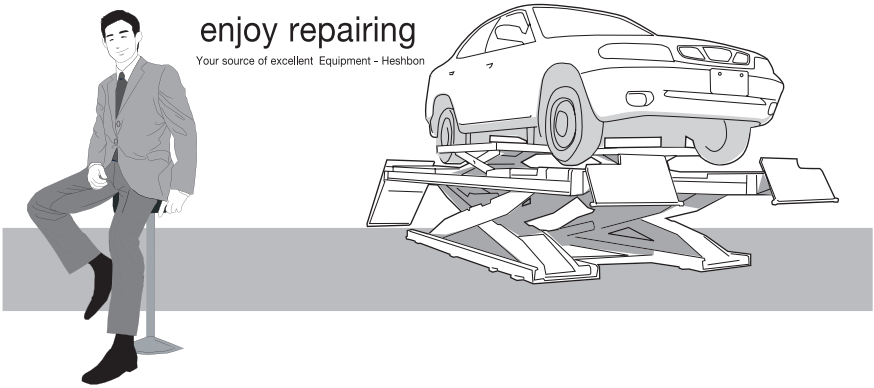

Caution Sticker Layout

1. Main Body

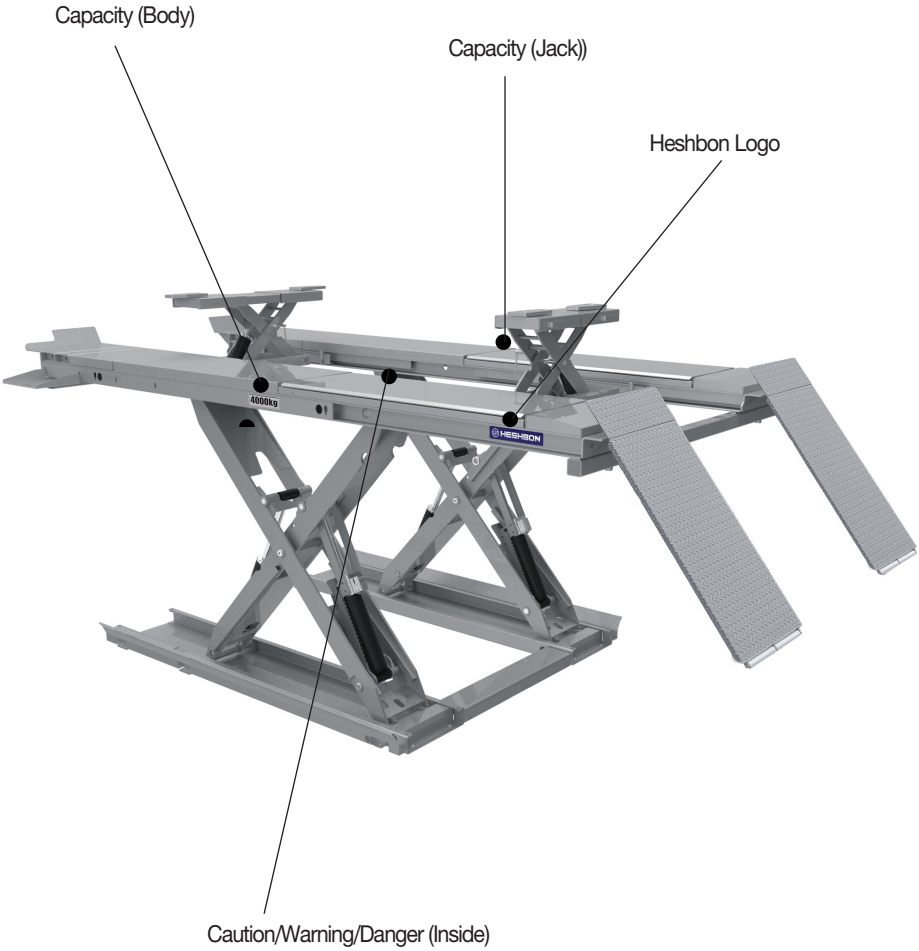

2. Control Panel

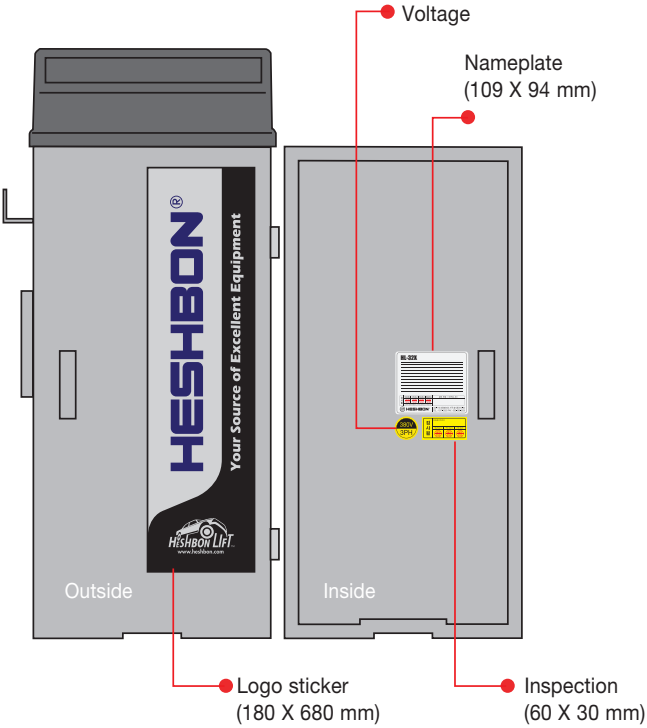

3. Name Plate

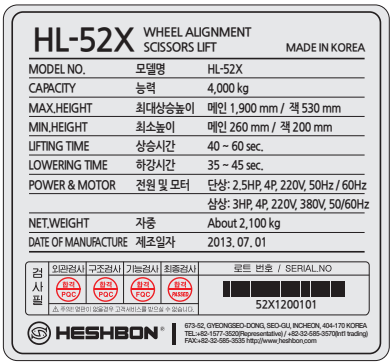

HL-52X WHEEL ALIGNMENT SCISSORS LIFT — MADE IN KOREA

MODEL NO.	모델명	HL-52X
CAPACITY	능력	4,000 kg
MAX.HEIGHT	최대상승높이	메인 1,900 mm / 잭 530 mm
MIN.HEIGHT	최소높이	메인 260 mm / 잭 200 mm
LIFTING TIME	상승시간	40 ~ 60 sec.
LOWERING TIME	하강시간	35 ~ 45 sec.
POWER & MOTOR	전원 및 모터	단상: 2.5HP, 4P, 220V, 50Hz / 60Hz
		삼상: 3HP, 4P, 220V, 380V, 50/60Hz
NET.WEIGHT	자중	About 2,100 kg
DATE OF MANUFACTURE	제조일자	2013. 07. 01

검사필	외관검사	구조검사	기능검사	최종검사	로트 번호 / SERIAL.NO
	합격 PQC	합격 PQC	합격 PQC	합격 PASSED	52X1200101

⚠ 주의! 열람이 없을경우 고객서비스를 받으실 수 없습니다.

HESHBON® | 673-52, GYEONGSEO-DONG, SEO-GU, INCHEON, 404-170 KOREA TEL:+82-1577-3520(Representative) / +82-32-585-3570(Int'l trading) FAX:+82-32-585-3535 http://www.heshbon.com

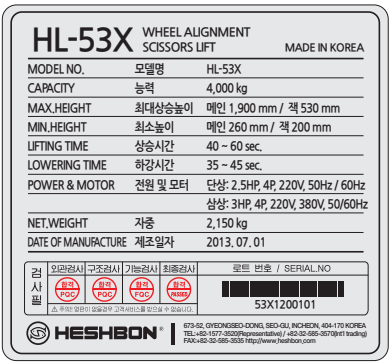

HL-53X WHEEL ALIGNMENT SCISSORS LIFT — MADE IN KOREA

MODEL NO.	모델명	HL-53X
CAPACITY	능력	4,000 kg
MAX.HEIGHT	최대상승높이	메인 1,900 mm / 잭 530 mm
MIN.HEIGHT	최소높이	메인 260 mm / 잭 200 mm
LIFTING TIME	상승시간	40 ~ 60 sec.
LOWERING TIME	하강시간	35 ~ 45 sec.
POWER & MOTOR	전원 및 모터	단상: 2.5HP, 4P, 220V, 50Hz / 60Hz
		삼상: 3HP, 4P, 220V, 380V, 50/60Hz
NET.WEIGHT	자중	2,150 kg
DATE OF MANUFACTURE	제조일자	2013. 07. 01

검사필	외관검사	구조검사	기능검사	최종검사	로트 번호 / SERIAL.NO
	합격 PQC	합격 PQC	합격 PQC	합격 PASSED	53X1200101

⚠ 주의! 열람이 없을경우 고객서비스를 받으실 수 없습니다.

HESHBON® | 673-52, GYEONGSEO-DONG, SEO-GU, INCHEON, 404-170 KOREA TEL:+82-1577-3520(Representative) / +82-32-585-3570(Int'l trading) FAX:+82-32-585-3535 http://www.heshbon.com

Danger/warning/caution

Rules for illustrations in the Manual.

These are the rules for the illustrations in the manual. Make sure that you read them and understand them. The rules are applied only to the manuals of Heshbon Co., Ltd.

Danger	Make sure you follow the instructions, otherwise critical injury or death can occur.
Warning	Make sure you follow the instructions, otherwise critical injury or damage can occur.
Caution	Make sure you follow the instructions; otherwise, injury or damage can occur
Tip	The terms are described to enhance the understanding of the equipment.
Point	Information to use the equipment efficiently.
Stop!	Precautions or check points for the use of the equipment.
	Please refer to the page.

Danger

Do not come under the vehicle during operation.
▶ This can cause injury or death.

Evacuate to a safe place instantly in the event that the vehicle tips.
▶ This can cause injury or death.

Do not overload the rated capacity.
▶ This can cause injury or death.

Please grounded to prevent electric shock.

Warning

Only trained personnel may operate the equipment. Inexperience can cause accidents.

Position the vehicle to make sure that it is balanced front and rear, right and left(otherwise the vehicle may fall off).

Do not operate damaged equipment(a critical accident could occur – contact your Heshbon supplier)

After that a vehicle is placed on the lift make sure that the hand brake is applied. Passenger transport is forbidden.

Allow no unauthorized persons in the work area.

Before lowering the lift, check that there are no obstructions under the vehicle or the lift arms.

When the vehicle is lifted, do not rock it as this may dislodge it.

Do not lift a vehicle using one pair of arms only.

To avoid injury, keep your feet clear of the arms and carriages.

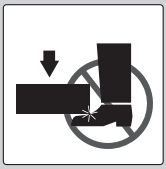

Before going under the lift, make sure that the safety pawls are engaged.

To avoid being electrocuted, disconnect the main power before opening the control panel.

Do not modify the control panel or the safety functions as this may impair their function.

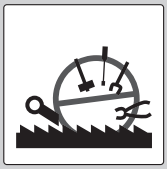

Do not rock the vehicle when lifted. Do not use a high pressure cleaner as the vehicle lower part.

Read and fully understand the manual before using the lift

Check the safety devices to see that they are clean and operable.

If the lift is idle for a long time, disconnect the main power supply. In the event of thunder storm. disconnect the main power supply.

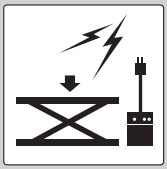

The lift should be installed by skilled engineers either from Heshbon or from Heshbon's appointed representatives. Failure to observe this makes the lift warranty invalid. If the lift is to be moved to another site at a later date, it must be reinstalled by skilled engineers either from Heshbon or from Heshbon's appointed representatives.

Checklist before installing

Installation site

The site must be flat and horizontal. The floor must have minimum 150mm depth of reinforced concrete.

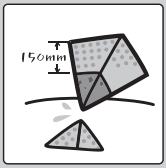

Surface load under the posts must be minimum 25N/㎟.

To maintain the warranty, the lift is intended for indoor installation only. In the event that it is installed outside it should be protected from snow and rain. Outdoor installation makes the warranty invalid.

Installation site

Ambient temperature -10℃ to 50℃. Do not operate under freezing conditions.

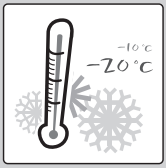

Vehicle access to the lift must be safe and easy.

There must be a safe working distance of minimum 1m between the lift and the wall or any fixed object.

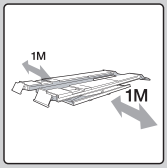

Installation site

-Hoist to be installed in dry location.
-If hoist is installed in a Pit sufficient drainage should be allowed to keep hoist dry.
-If hoist gets does get wet make sure all electrical wiring is dried before operation as could cause electric shock or damage to PCB.

To ensure that the anchor is secure, the hole for an anchor bolt must be more than 2/3 of the bolt length.

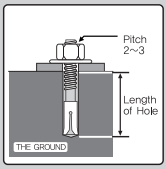

Skilled engineers of Heshbon or its sale representative agency shall install the lift, otherwise a failure may occur.

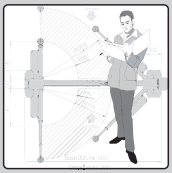

Place of installation (Layout)

Checkpoints before selecting the place of installation
① Distance from the wall or any fixed object ② Drive-on direction
③ position of power post and slave posts ④ Ceiling height

HL-52X (On ground)

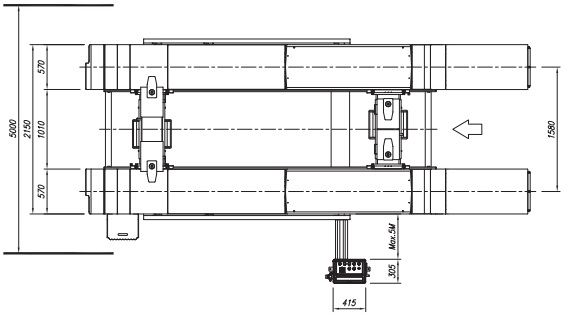

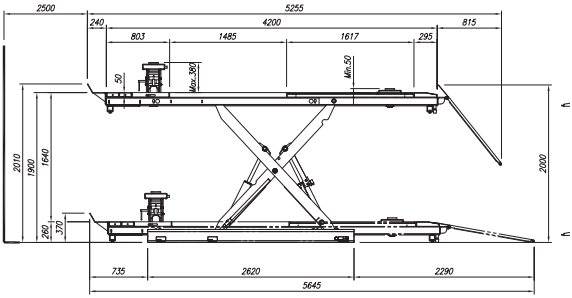

HL-52X (In ground)

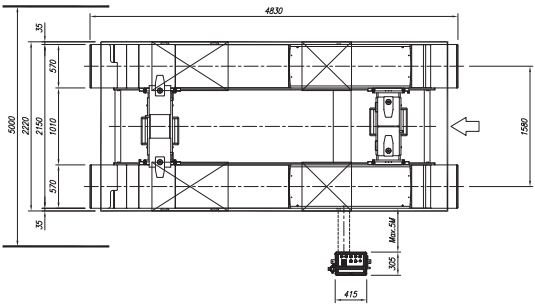

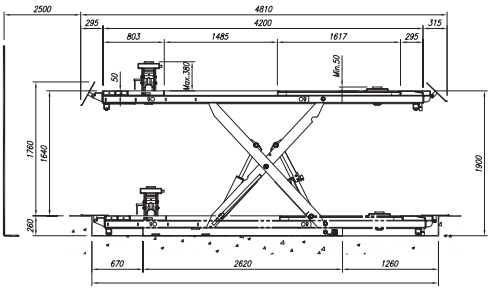

HL-53X (On ground)

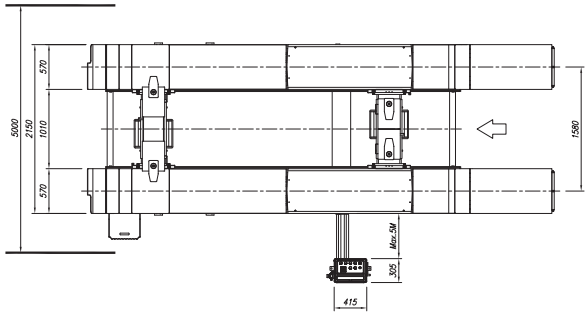

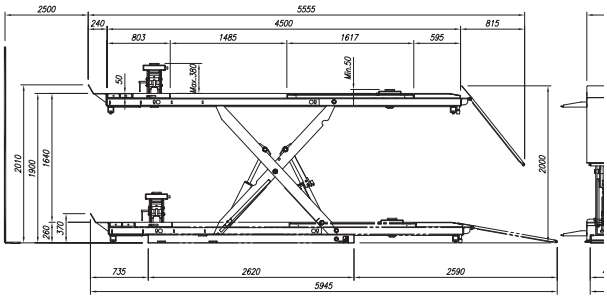

HL-53X (In ground)

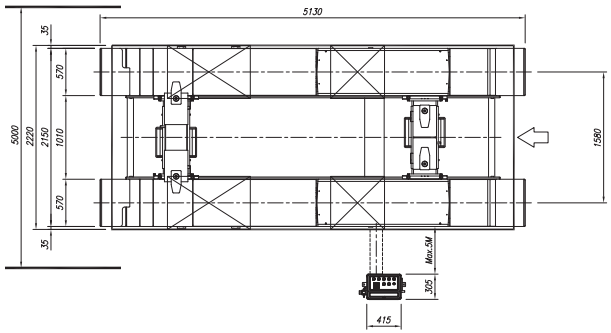

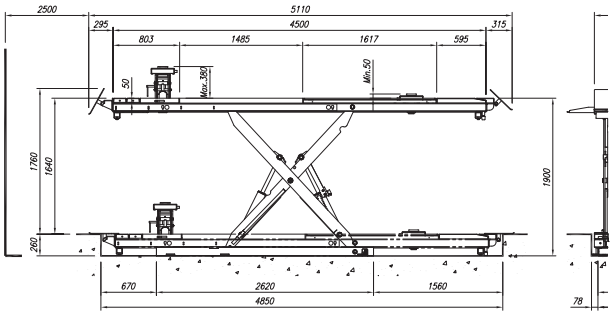

Installation procedures

ⓐPrecise horizon adjustment bolt
ⓑShims ⓒAnchor bolt

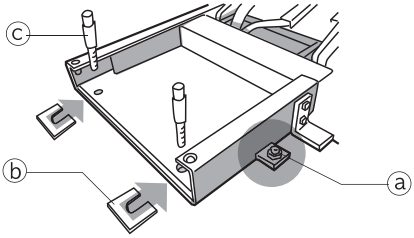

■ Fixation horizon of the base

▶After adjusts horizon of the product precisely, fix up using anchor bolt.

1 Adjustment the horizon of the base

After measure the horizontal status, lay down the lie. (in case of precise adjustment, use 'a' bolt.)

2 Fixation of base (anchor)

After adjusts horizon, fix up the base platform using anchor.

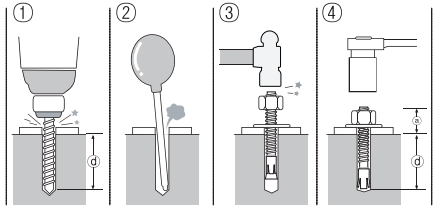

Anchor bolt installation.

(1) Drill a hole. (d: hole depth)
(2) Clean the inside of the hole.
(3) Put the anchor bolt into the hole and hammer in until it reaches the bottom of the hole.
(4) Tighten the bolt with a spanner. (a:35~45mm)
(Torque : 80~100 N.m)

■ Connection of oil pressure hose

▶Connect oil pressure hose by referring oil pressure line diagram. (HL-52X/53X)
(Refer to part list oil pressure circuit)

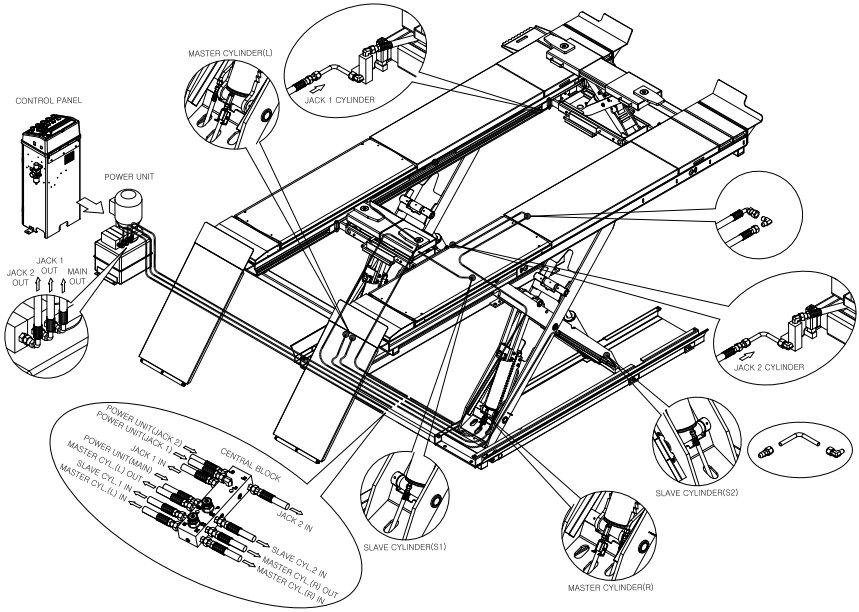

■ Connection of air hose

▶ Connect air hose by referring to air line diagram. (Refer to part list air circuit diagram)
(HL-52X/53X)

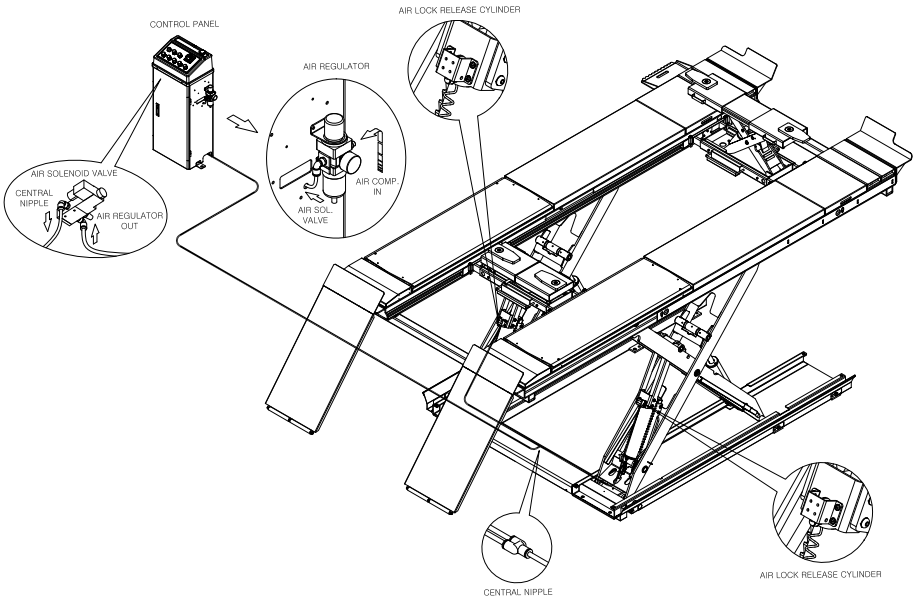

Check points before operation

Before loading the lift, check the following points.

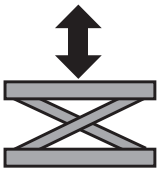

Test operation

Operate ascent and descent 2~3 times under no load condition.

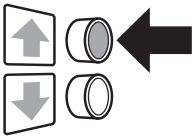

Switch operation

Check that the ascent and descent push buttons are working correctly.

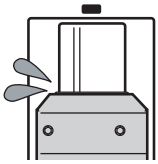

Hydraulic check

Check if there are no hydraulic leaks from either cylinders, pipes, or hose joins.

Mechanical check

Check the tightness of all nuts, bolts, etc.

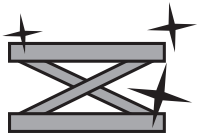

Exterior check

Check the exterior of the lift to ensure that there is no obvious damage.

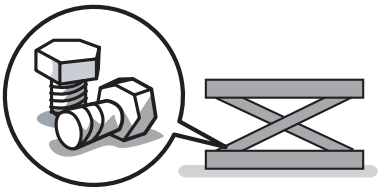

Cleanliness

Check every day that the lift is clean and that the work area is clean and free from debris or obstructions.

Inspect the lift everyday to operate the lift safely for a long time.

Operation

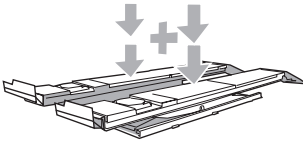

1 Prior to use

Check that the platforms are parked at floor level by using the descent button. Check that the auxiliary lift is at the down position.

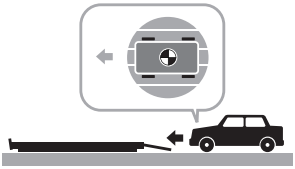

2 Prior to vehicle entry

Check that the position of the righthand (movable) platform is suitable for the majority of the vehicles to be lifted. Fix the platform at this position with the bolts provided.

Attention before you enter

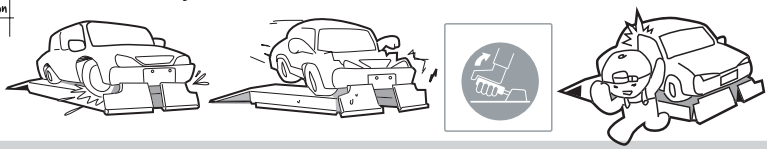

Remove the humidity of the tire before you enter.	Attention the sudden stop.	After you drive into the lift, hold the side break.	After you drive into the lift, get out of the car.

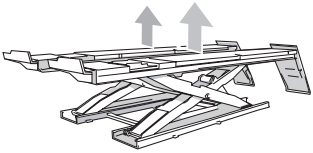

3 Ascent

Operate the ascent button until platforms reach the chosen work height. park on the relevant ratchet holes.

4 Auxiliary lift operation

Raise the auxiliary lift app. 50mm to allow adjustment of the rear extensions. Position the rubber blocks provided under the vehicle pick-up points. Again,operate the auxiliary lift ascent button to raise the vehicle to the required work height.

5 Vehicle repair

Perform the necessary repairs and/ or maintenance on the vehicle. After completion,lower the auxiliary lift. As soon as the vehicle load is firmly on the platforms, stop the descent of the auxiliary lift, remove the rubber pads, push in the extensions, and lower to bottom position. Lower main lift.

Driving Operation

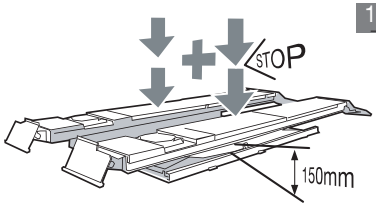

1 Operation of the main lift

▶Ascent
- Main lift ascents when ascent button is pressed.

▶Descent
- Main lift descents when descent button is pressed. (Descents on 1st and 2nd)
- 1st descent: Descents to 150mm from ground when button is pressed.
- 2nd descent: Descents again when button no.2 and 9 buttons are pressed at same time. (Buzzer sounds) (HL-53X)

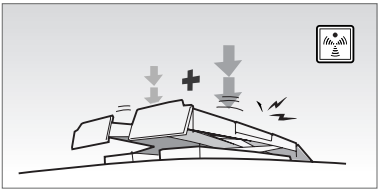

2 Buzzer operation

Sounds on 2nd descent stage of main lift. (150mm from ground)

Caution

▶The buzzer sounds when possibility of trouble is high.

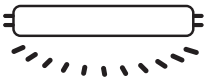

3 Operation of underbody lighting (optional)

A set of 4 light units to provide ultimate underbody lighting is available as an option.

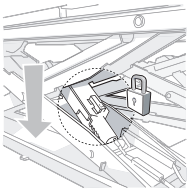

4 Parking button

Lowers the lift to the first available parking position at working height, thereby ensuring that the lift platforms and cross members are horizontal and ensuring stability during the repair work.

■ Safety Devices

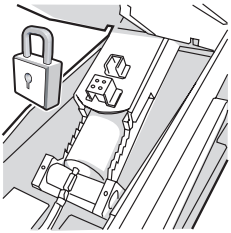

1 Operating Safety Locker

▶ Operate safety device for safe maintenance work.
(Operates where the center of the link, main, auxiliary lift)

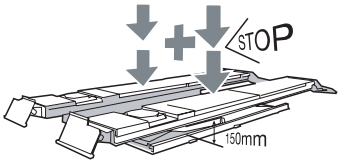

2 Alignment Sensor (Photo sensor)

▶ There is photo sensor left/right side of the main lift and auxiliary lift. If the heights of the left/right platform are different or if there is any obstacle inside of the platform, the lift stops and bell rings.

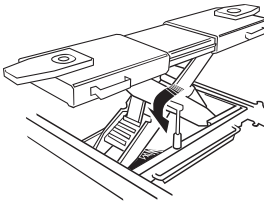

3 Manual Jack Safety Locker-Optional (Center rolling jack is applied)

▶ If the lift center 2 level is used, operate the safety lock manually and use it safely.

Equipment maintenance and service

■ Lubrication

▶Grease or oil should be applied every 2 or 3 months to the parts shown below.

1 Injecting Grease

▶Inject enough grease at shaft of auxiliary lift and roller. (2~3 month period)
▶Auxiliary lift slide rubbing surface.

2 Injecting Oil

▶Location of injecting lubricating oil
- Paints the lubricant oil to the rubbing surface, base platform every 2~3 month.

■ Cleanliness

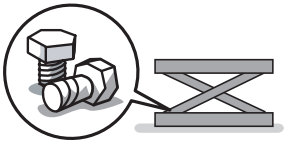

▶Check the working area under and around the lift for cleanliness. Check visibly if any nuts or bolts are loose or missing. Replace and retighten as necessary.

▶Safety Devices
Check the area around the safety devices for cleanliness and any obstruction.

■ Check the snap-ring of the link axis

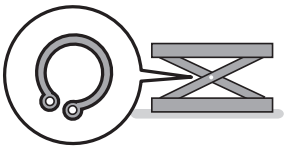

▶Check the existence of the inside and outside of the link axis.

■ Emergency descent

How to descent the lift manually
1 In emergency

▶Release of the main, auxiliary lift locker
① Release of the locker
② Lay down lies.

It is necessary

① when a blackout or the hydraulic circuit failure occurs
② When the lift cannot descend as specified in the troubleshooting

Preparation Before Operating

① Remove any object under the lift.
② Turn off the main power switch and panel power switch.
③ Manually release the locker
In case of locking state, releases the locker while another hydraulic device is lifting the locker 30 mm high. .
④ After taking the pieces manually apart, put the supports between lockers.

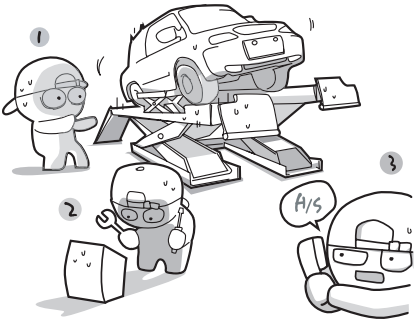

Danger

This situation is potentially very dangerous.
This operation should not be undertaken by unskilled staff. Therefore, if in any doubt, call your lift supplier immediately for after sales service.

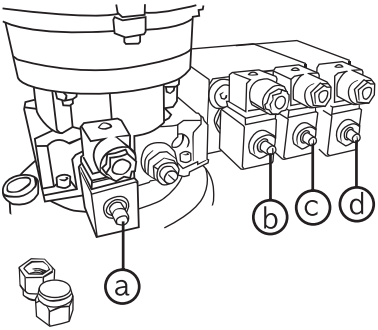

Operation procedure of manual descent

*Remove the cover of the powerpack.
Remove the solenoid valve hexagon cap (19mm) in the middle of the pump manifold.
Turn the emergency cock lever (a) very slowly anti-clockwise. Too much movement will increase descent speed too much.

Danger Turn the emergency cock lever very slowly to ensure that descent speed is slow and safe, especially if there is a vehicle on the lift.

Steps after completing the operation

Turn the lever clockwise and lock it securely when the lift reaches bottom position. Replace and refit the hexagon cap. Request after sales service to check the lift.

2 Powerpack pressure

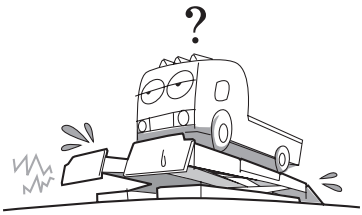

Danger

The pressure is set by the factory.
The lift may be damaged if the operator increases the pressure.
If the equipment does not lift the rated capacity,contact your lift supplier for engineer assistance.

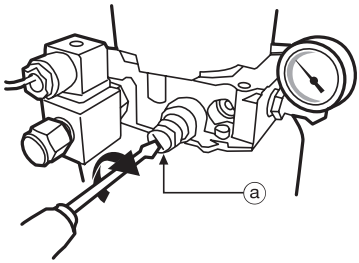

Information for the authorized service engineer only

Open the control panel and install a pressure gauge in the pump manifold as shown. The pressure adjusting screw (a) is sealed by the factory.
Remove the seal and adjust the pressure with a screwdriver. This should be done while pressing the ascent button at the same time and with the lift loaded with the full rated capacity.

Proper pressure by model :
HL-52X/53X - 240kgf/㎠

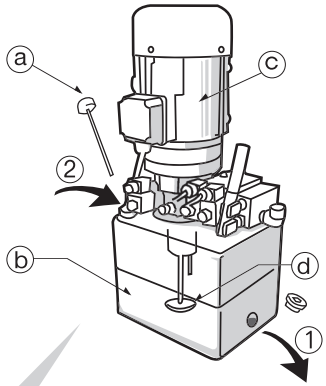

ⓐ Cap of the oil tank
ⓑ Oil tank
ⓒ Cover of the hydraulic unit
ⓓ Oil nozzle cap

① Oil injection
② Oil discharge

3 Oil Change

▶ Oil should be changed 3 months after installation and thereafter annually.

Oil Change Procedure

① Remove the cover of the hydraulic unit.
② Remove the oil filter cap and dipstick. Carefully remove the oil drain plug and allow the oil to discharge into a suitable container.
③ Refit the drain plug and tighten.
④ Refill the oil tank with new oil.
⑤ Check with the dipstick that the level is correct, raise and lower the lift and recheck that the level is still correct. If not, top up with oil.
⑥ Refit the cover.

Tip

At the annual oil change, after having drained the oil tank, remove the oil tank from the pump and check the condition of the pump filter. Clean or replace as necessary.
Replace tank and follow the above procedure.

■Air Regulator Maintenance

1

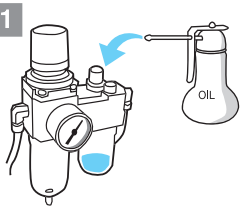

1 Lubricator

Disconnect the air line. Check the level of oil in the lubricator and top up at intervals as necessary. Type of oil according to the air tool manufacturer's specifications. Refit air line.

2

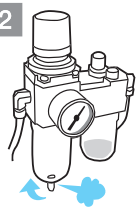

2 Moisture Separator

Check at regular intervals and drain the moisture separator glass through the drain plug as necessary. Refit air line.

3

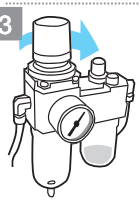

3 Pressure Adjustment

Pressure should be maintained at minimum 6kg/㎠ and maximum 8kg/㎠. Adjust regulator cap as necessary.

Trouble shooting

Symptoms		Check point	Corrective Action to be taken
Hydraulic Cylinder And Its Units	An abnormal noises at motor.	1. Rated capacity is exceeded. 2. Relief pressure is low. 3. Shortage of hydraulic oil.	1. Operate within rated capacity. 2. Adjust to relif pressure (275 bar) 3. Let air out of the hydraulic unit after supplying the oil.
	Hydraulic oil is leaking.	1. Defect in hydraulic hoses. 2. Leakage from connecting parts. 3. Bad cylinder packing.	1. Replace the hydraulic hose. 2. Tighten the connection. 3. Request A/S.
	Oil is contaminated.	Check if an water or Foreign substance comes into the cylinder.	Exchange oil (annually) (Hydraulic oil : 32CST/12litter)
	The lift is not move up.	Check if the oil is leaked or hydraulic pump are damaged.	Contact customer service department.
	The lift is not lowered.	Check if the value is properly operated.	Contact customer service department.
	The fitting parts is rusted.	Check if the grease is not sufficiently injected.	Inject the grease every 1 month.
Electric Devices	Moto is not operating and the abnormal noise at motor is listened.	1. Check if the motor is damaged. 2. Check if the fuse is opened. 3. Check if the push button is damaged. 4. Check if the upper limit is operated. 5. Check if wiring gauge is proper. 6. Check if the input power less than 200V is supplied.	1 Replace the motor (Request A/S). 2. Replace the fuse after solving trouble. 3. Replace the push button (Request A/S). 4. Re-operate after lowering the lift. 5. Replace to the cable with over 3.5mm2 diameter. 6. Increase the input power capacity.
	Fuse is snapped	1. Check the Contact of magnetic contactor. 2. Check the capacity of circuit breaker. 3. Check if the wire is damaged.	1. Replacement (Request A/S). 2. Replacement (Request A/S). 3. Replacement after checking.
	Motor is operating but lift is not moved up.	1. Check if the rotating direction of motor is correct. 2. Check if hydraulic lines is damaged.	1. Re-operate after changing the phase connection. 2. Refer to check points for hydraulic cylinder and unit.

Check list and periodic maintenance

Inspection Period	Points to be Checked	Items to be Checked	Inspection Method	Action to be Taken	Replacement Period
1 Week	Rubber Support for Adjustment	Abrasion And Deformation	Visual	Replacement	1 Year
	Magnetic Contactor	Damage of Contact	Measurement	Replacement	2 Year
3 Months	Wire Rope	Abrasion, Deformation, and Breaking of Wire	Visual	Replacement	2 Year
			2 Months (Use Over 20 Times Per One Day)		6 Months (Use Over 20 Times Per One Day)
	Post Guide	Abrasion	Visual	Replacement	4 Year
	DU Bush	Abrasion	Visual	Replacement	4 Year
	Axle for Wire Pulley	Noise And Abrasion	Visual	Replacement	5 Year
	Wire Pulley	Abrasion	Visual	Replacement	5 Year
6 Months	Electrical Components	Damage of Components	Measurement	Replacement	3 Year
	Hydraulic Oil	Shortage of Oil	Visual	Replacement	1 Year
1 Year	Piston Seal Kit	Oil Leak or Deformation	Visual	Replacement	3 Year
	Load Seal Kit	Oil Leak or Deformation	Visual	Replacement	3 Year

APPENDIX

PART LIST

ELECTRIC CIRCUIT

HYDRAULIC CIRCUIT

PNEUMATIC CIRCUIT

This installation manual is prepared as of July 2013. This manual is subject to change without prior notice if the lift specificaion is changed.

01(Overall-onground)

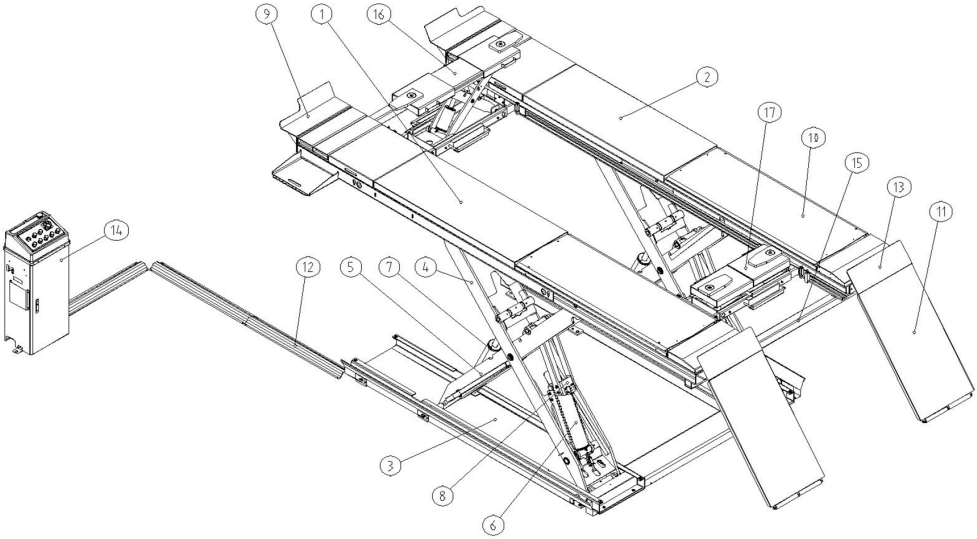

번호	품명(한글)	품명(영문)	수량	규격	도번	품번
NO.	PART NAME	PART NAME	Q'TY	SPECIFICATION	DWG.NO.	ITEM NO.
1	승강장조립품(구동)	PLATFORM ASSEMBLY(R)	1			52X0B001/53X0B001
2	승강장조립품(종동)	PLATFORM ASSEMBLY(L)	1			52X0B002/53X0B002
3	베이스조립품(구동/종동)	BASE ASSEMBLY(R/L)	2(R1/L1)			52X0C002/52X0C003/53X0C000
4	1번링크조립품(구동/종동)	LINK 1 ASSEMBLY(R/L)	2(R1/L1)			52X0E002/52XOE003
5	2번링크조립품(구동/종동)	LINK 2 ASSEMBLY(R/L)	2(R1/L1)			52X0F002/52X0F003
6	실린더조립품(마스터)	CYLINDER ASSEMBLY(MASTER)	2		52XG00A/53XG00A	52X0G003
7	실린더조립품(슬레이브)	CYLINDER ASSEMBLY(SLAVE)	2		52XG20A/53XG20A	52X0G203
8	메인상부록커조립품	MAIN UPPER LOCKER ASSEMBLY	2		52XG30A/53XG30A	
9	타이어스톱퍼제관품(R/L)	TIRE STOPPER(R/L)	2(R1/L1)		52XH50A/53XH50A	52G75000/52G75001
10	사이드슬립조립품	SIDE SLIP ASSEMBLY	2			
11	부착형진입판조립품	RAMP ASSEMBLY	2		52XL00A/53XL00A	52G05500
12	유압호스보호덮개판(2)	HOSE PROTECT COVER(2)	3	2.3t*35*135*1000L	52XO03A/53XO03A	31X00235
13	연결진입판제관품	CONNECT RAMP	2		52XP00A/53XP00A	52G06100
14	콘트롤패널조립품	CONTROL PANEL ASSEMBLY	1			52G99000-001/53G99000-001
	콘트롤패널조립품(KCs)	CONTROL PANEL ASSEMBLY(KCs)	1			52G99000-002/53G99000-002
15	센터롤링잭크로스보강대조립품	CENTER ROLLING JACK CROSS BAR ASS'Y	2			52G53000
16	잭조립품J03:유압TYPE(52G,53G)(1)	JACK ASSEMBLY J03 HYD. TYPE(52G,53G)(1)	1			J0320000
17	잭조립품J03:유압TYPE(52G,53G)(2)	JACK ASSEMBLY J03 HYD. TYPE(52G,53G)(2)	1			J0320000

02(Overall-inground)

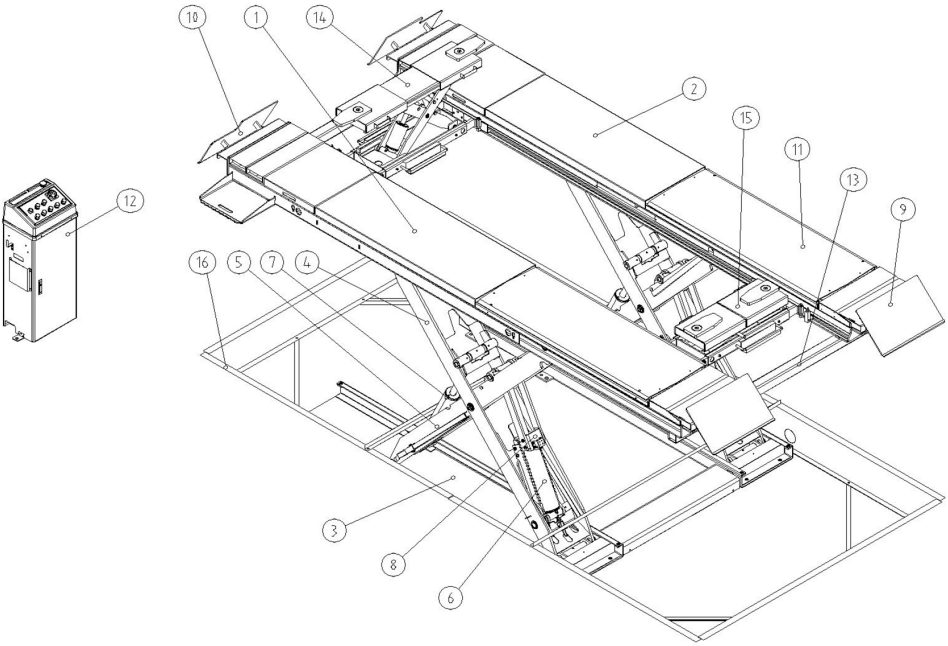

번호	품명(한글)	품명(영문)	수량	규격	도번	품번
NO.	PART NAME	PART NAME	Q'TY	SPECIFICATION	DWG.NO.	ITEM NO.
1	승강장조립품(구동)	PLATFORM ASSEMBLY(R)	1			52X0B001/53X0B001
2	승강장조립품(종동)	PLATFORM ASSEMBLY(L)	1			52X0B002/53X0B002
3	베이스조립품(구동/종동)	BASE ASSEMBLY(R/L)	2(R1/L1)			52X0C002/52X0C003/53X0C000
4	1번링크조립품(구동/종동)	LINK 1 ASSEMBLY(R/L)	2(R1/L1)			52X0E002/52XOE003
5	2번링크조립품(구동/종동)	LINK 2 ASSEMBLY(R/L)	2(R1/L1)			52X0F002/52X0F003
6	실린더조립품(마스터)	CYLINDER ASSEMBLY(MASTER)	2		52XG00A/53XG00A	52X0G003
7	실린더조립품(슬레이브)	CYLINDER ASSEMBLY(SLAVE)	2		52XG20A/53XG20A	52X0G203
8	메인상부록커조립품	MAIN UPPER LOCKER ASSEMBLY	2		52XG30A/53XG30A	
9	타이어스톱퍼(1)제관품	TIRE STOPPER(1)	2		52XH10A/53XH10A	52G51000
10	타이어스톱퍼(2)제관품(R/L)	TIRE STOPPER(2)(R/L)	2(R1/L1)		52XH20A/53XH20A	52G52000/52G52001
11	사이드슬립조립품	SIDE SLIP ASSEMBLY	2			
12	콘트롤패널조립품	CONTROL PANEL ASSEMBLY	1			52G99000-001/53G99000-001
	콘트롤패널조립품(KCs)	CONTROL PANEL ASSEMBLY(KCs)	1			52G99000-002/53G99000-002
13	센터롤링잭크로스보강대조립품	CENTER ROLLING JACK CROSS BAR ASS'Y	2			52G53000
14	잭조립품J03:유압TYPE(52G,53G)(1)	JACK ASSEMBLY J03 HYD. TYPE(52G,53G)(1)	1			J0320000
15	잭조립품J03:유압TYPE(52G,53G)(2)	JACK ASSEMBLY J03 HYD. TYPE(52G,53G)(2)	1			J0320000
16	매립케이스조립품(52G/53G)	PIT FRAME ASSEMBLY(52G/53G)	1		52XA10A/53XA10A	52G79995/53G79995

03(Platform)

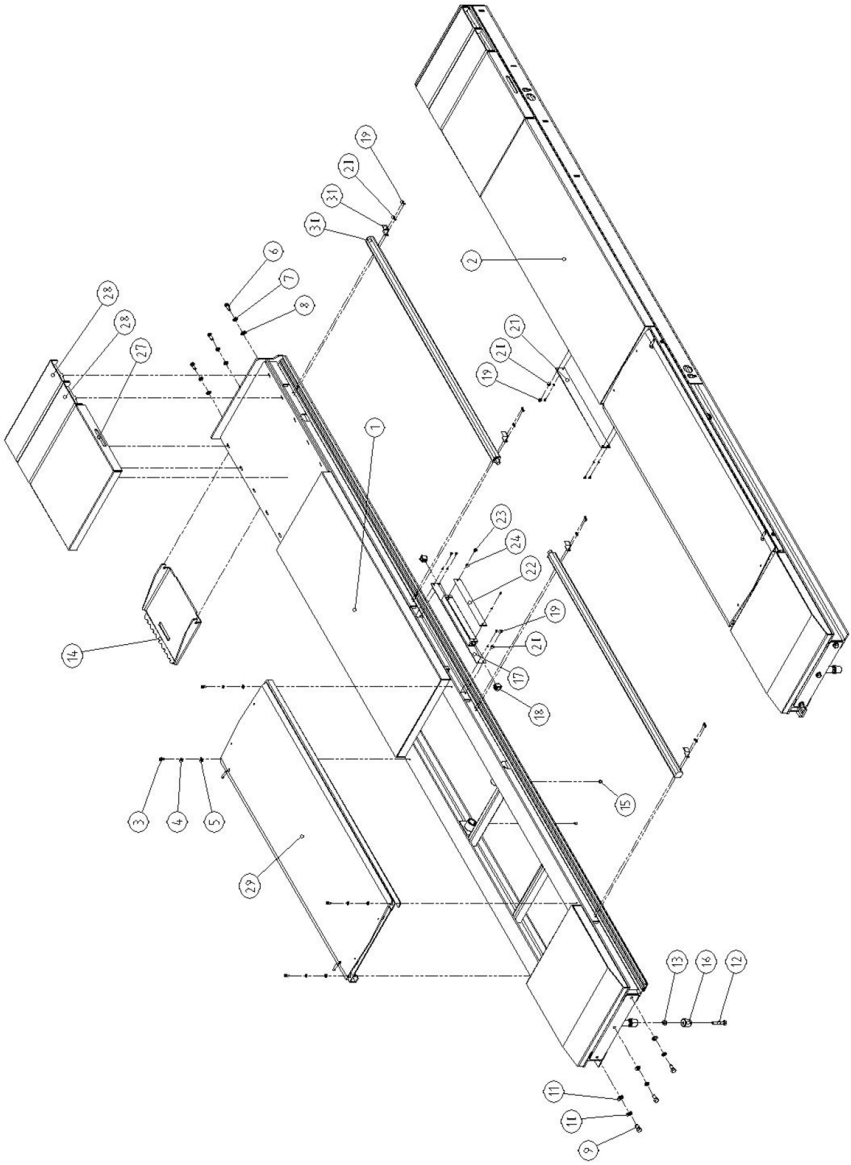

번호	품명(한글)	품명(영문)	수량	규격	도번	품번
NO.	PART NAME	PART NAME	Q'TY	SPECIFICATION	DWG.NO.	ITEM NO.
1	메인승강장제관품(구동)	MAIN PLATFORM(R)	1		52GB00H/53GBOOH	52G01000/53G01000
2	메인승강장제관품(종동)	MAIN PLATFORM(L)	1		52GB00H/53GBOOH	52G01500/53G01500
3	렌치볼트	WRENCH BOLT	8	M8x15L		WBM0815
4	스프링와샤	SPRING WASHER	8	M8		WSM08
5	평와샤	PLAIN WASHER	8	M8		WPM08
6	육각볼트	HEX BOLT	6	M12x30L		HEXM1230
7	스프링와샤	SPRING WASHER	6	M12		WSM12
8	평와샤	PLAIN WASHER	6	M12		WPM12
9	육각볼트	HEX BOLT	6	M14x30L		HEXM1430
10	스프링와샤	SPRING WASHER	6	M14		WSM14
11	평와샤	PLAIN WASHER	6	M14		WPM14
12	육각볼트	HEX BOLT	2	M14x70L		HEXM1470
13	육각너트	HEX NUT	2	M14		HNM14
14	발판몸체	FOOT PLATE	1	6tx65x400x349.9	52GB20A/53GB20A	L5BAB200
15	무두렌치볼트	SET SCREW	4	M8x15L		MWBM0815
16	머리보호고무	HEAD PROTECT RUBBER	2	Ø41.5x40L	52GB29A/53GB29A	L5BAB190
17	잭스위치박스제관품	JACK SWITCH BOX	1		52GB34C/53GB34C	52G11240
18	시소스위치	SEESAW SWITCH	2	6P3단 10A		WOE-6310MG
19	둥근머리십자볼트	ROUND HEAD BOLT	4	M5x8L		RHCBM0508
20	스프링와샤	SPRING WASHER	4	M5		WSM05
21	승강장중간덮개(2)	PLATFORM CENTER COVER(2)	1	2.3tx58x570	52GB36C/53GB36B	52G01350
22	잭스위치박스덮개판	JACK SWITCH BOX COVER	1	1.6tx43.5x330	52GB38C/53GB38C	52G11250
23	둥근머리십자볼트	ROUND HEAD BOLT	2	M4x8L		RHCBM0408
24	스프링와샤	SPRING WASHER	2	M4		WSM04
27	보조승강장몸체	AUXILIARY PLATFORM	2	4.5tx57x475x570	52GB61A/53GB61B	53G90310
28	턴테이블승강대(1)제관품	AUXILIARY PLATFORM(1)	4		52GN30B/53GN30B	52G00300
29	사이드슬립조립품	SIDE SLIP ASSEMBLY	2			
30	형광작업등조립외주품	WORKING LAMP	4		53GB26A	42F96000
31	작업등조립고정대	WORKING LAMP COVER	4	3.2tx30x42x43.6	53GB39A	53G62000

04(Base)

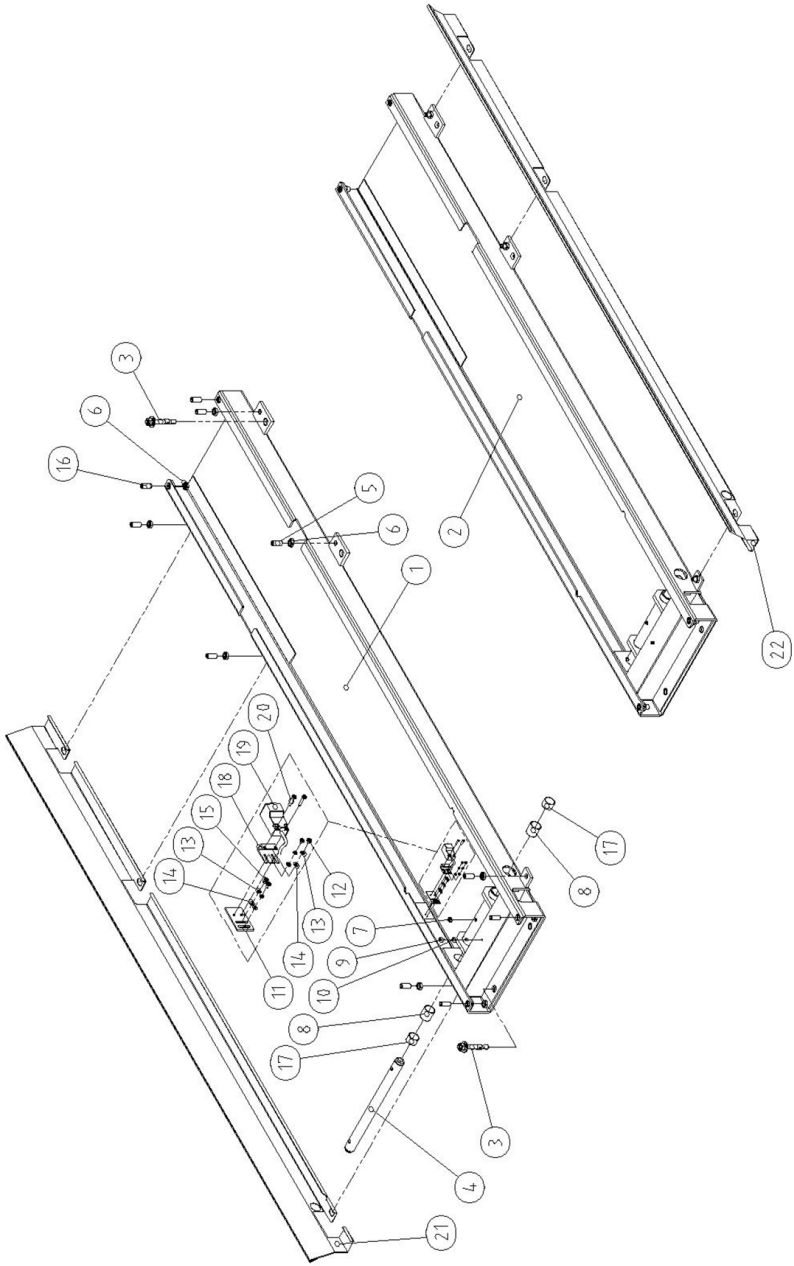

번호	품명(한글)	품명(영문)	수량	규격	도번	품번
NO.	PART NAME	PART NAME	Q'TY	SPECIFICATION	DWG.NO.	ITEM NO.
1	베이스제관품(구동)	BASE(R)	1		52XC00A/53XC00A	52X0C000
2	베이스제관품(종동)	BASE(L)	1		52XC00A/53XC00A	52X0C001
3	웨지앙카볼트	WEDGE ANCHOR BOLT	12	M16*125L		ANCW-16-125
4	베이스링크핀	BASE LINK SHAFT	2	^35*452L	52XC03A/53XC03A	52X0C030
5	무두렌치볼트	SET SCREW	12	M16*50L		MWBM1650
6	육각너트(3종)	HEX NUT(THIN)	20	M16		HN3M16
7	구리스니플	GREASE NIPPLE	2	PT1/8"*ST		GN-1/8S
8	DU베어링	DU BUSHING	4	DU3540		DU3540
9	육각볼트(신주)	HEX BOLT(BRASS)	1	M5*15L		HEXBM0515
10	육각너트(신주)	HEX NUT(BRASS)	2	M5		HNBM05
11	안전센서보조받침대	SAFETY SENSOR AUXILIARY BRACKET	1	3.2t*35*55	53XC15A	52F02550
12	둥근머리십자볼트	ROUND HEAD BOLT	2	M4*5L		RHCBM0405
13	스프링와샤	SPRING WASHER	4	M4		WSM04
14	평와샤	PLAIN WASHER	4	M4		WPM04
15	둥근머리십자볼트	ROUND HEAD BOLT	2	M4*8L		RHCBM0408
16	무두렌치볼트	SET SCREW	8	M16*40L		MWBM1640
17	DU베어링	DU BUSHING	4	DU3525		DU3525
18	근접센서브라켓	PROXIMITY SENSOR BRACKET	1	2.3t*15*34*30	53XC26A	52F02180
19	하네스(근접스위치)(15)(사각)	HARNESS(PROXIMITY SENSOR)(15)	1	200L	53XW10A	52F10360
20	둥근머리십자볼트	ROUND HEAD BOLT	2	M4*20L		RHCBM0420
21	베이스발보호가이드(R)	BASE FOOT PROTECT GUIDE(R)	1	1.6t*104*144*2620	52XB65A	52X0B650
22	베이스발보호가이드(L)	BASE FOOT PROTECT GUIDE(L)	1	1.6t*104*144*2620	52XB65A	52X0B651

05(Link1,2)

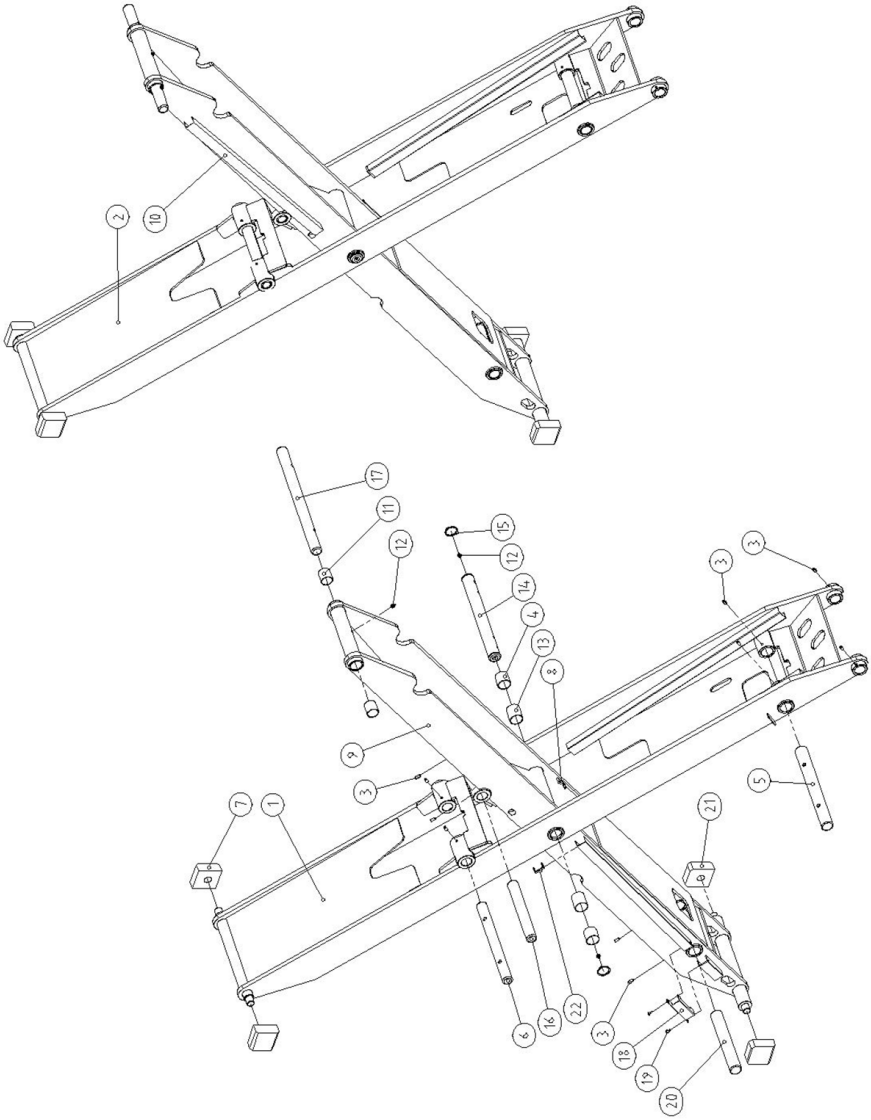

번호	품명(한글)	품명(영문)	수량	규격	도번	품번
NO.	PART NAME	PART NAME	Q'TY	SPECIFICATION	DWG.NO.	ITEM NO.
1	1번링크제관품(구동)	LINK 1(R)	1		52XE00A/53XE00A	52X0E000
2	1번링크제관품(종동)	LINK 1(L)	1		52XE00A/53XE00A	52X0E001
3	무두렌치볼트	SET SCREW	20	M8*15L		MWBM0815
4	DU베어링	DU BUSHING	4	DU4040		DU4040
5	실린더하부핀	CYLINDER BOTTOM SHAFT	2	^40*357L	52XE07A/53XE07A	52G03515
6	실린더상부핀(1)	CYLINDER UPPER SHAFT(1)	2	^35*355L	52XE20A/53XE20A	52X0E200
7	1번링크승강장슬라이더	PLATFORM SLIDER	4	37*80*82	52XE23A/53XE23A	52G00040
8	철판팩킹	EDGE RUBBER	2	3t*80L	52XE24A/53XE24A	52X0E240
9	2번링크제관품(구동)	LINK 2(R)	1		52XF00A/53XF00A	52X0F000
10	2번링크제관품(종동)	LINK 2(L)	1		52XF00A/53XF00A	52X0F001
11	DU베어링	DU BUSHING	4	DU3540		DU3540
12	구리스니플	GREASE NIPPLE	6	PT1/8"*ST		GN-1/8S
13	DU베어링	DU BUSHING	4	DU4050		DU4050
14	링크중간핀	LINK CENTER SHAFT	2	^40*375L	52XF09A/53XF09A	52G04055
15	스냅링	CIRCLIP	4	CS40		SN-CS40
16	실린더상부핀	CYLINDER UPPER SHAFT	2	^35*260L	52XF10A/53XF10A	52G04060
17	메인승강장고정핀	MAIN PLATFORM SHAFT	2	^35*476L	52XF13A/53XF13A	52G04070
18	2번링크호스가이드(4)	LINK 2 HOSE GUIDE(4)	2	1.6t*26*36*140	52XF19A/53XF19A	52X0F190
19	트러스머리탭핑볼트(TH3종)	TRUSS HEAD TAPPING BOLT	4	M5*13L		TRTBM0513
20	실린더하부핀(2)	CYLINDER BOTTOM SHAFT(2)	2	^40*262L	52XF20A/53XF20A	52X0F200
21	2번링크베이스슬라이더	BASE SLIDER	4	33.5*80*84.5	52XF23A/53XF23A	52G00050
22	철판팩킹	EDGE RUBBER	2	3t*70L	52XF24A/53XF24A	52X0F240

06(Cylinder, Locker)

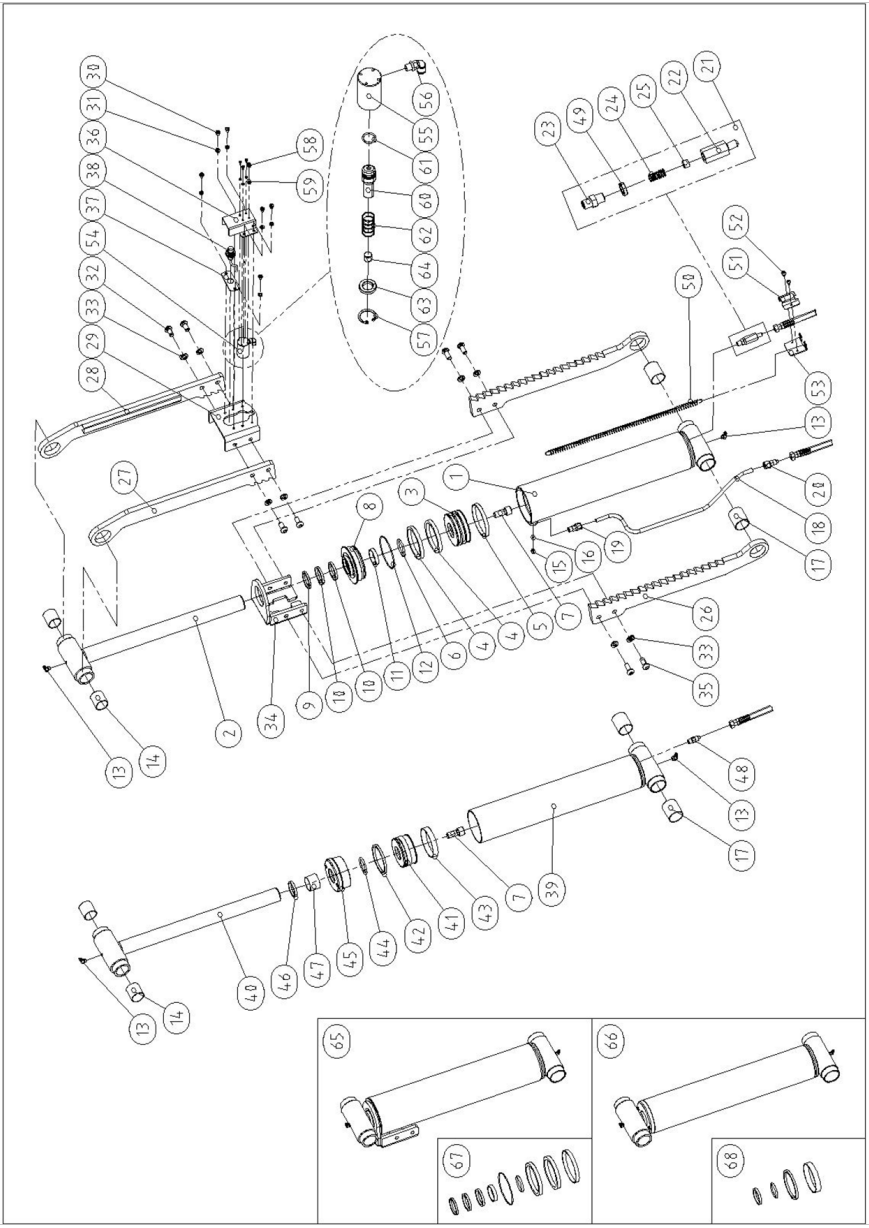

번호	품명(한글)	품명(영문)	수량	규격	도번	품번
NO.	PART NAME	PART NAME	Q'TY	SPECIFICATION	DWG.NO.	ITEM NO.
1	실린더제관품(마스터)	TUBE(MASTER)	2			52X0G001
2	로드봉제관품(마스터)	ROD BAR(MASTER)	2			52X0G002
3	피스톤(마스터)	PISTON(MASTER)	2	^99*42.5L	52XG03A/53XG03A	L5BAG030
4	U-팩킹(UHP100)-발쿠아(VALQUA)	U-PACKING(UHP100)-(VALQUA)	4	^100*^85*9B-V		UHP1008509-V
5	웨어링(POLY)	WEAR RING(POLY)	2	^100*95*2.5T*10H		WEAR1009510P
6	O-링(유압용)	O-RING	2	P44		OROP44
7	렌치볼트(H)	WRENCH BOLT(H)	4	M16*35L		WBHM1635
8	헤드카바(마스터)	HEAD COVER(MASTER)	2	^114*41L	52XG04A/53XG04A	L5BAG040
9	더스트시일	DUST SEAL	2	^43*^51*5B		DHS435105
10	로드시일	ROD SEAL	4	^43*^53*6B		ROD43536
11	웨어링	WEAR RING	2	^43*^48*10B		WEAR434810
12	O-링	O-RING	2	G95		ORG95
13	구리스니플	GREASE NIPPLE	8	PT1/8"*45도		GN-1/8-45
14	DU베어링	DU BUSHING	8	DU3540		DU3540
15	무두렌치볼트(백색)	SET SCREW(WHITE)	2	M8*8L		MWBM0808W
16	강구	STEEL BALL	2	3/16"		BALL-3/16"
17	DU베어링	DU BUSHING	8	DU4050		DU4050
18	유압파이프(R/L)	HYDRAULIC PIPE(R/L)	2(R1/L1)	^10*1t*98*113*450	52XG10A/53XG10A	52X0G103/52X0G102
19	멜콘넥터	MALE CONNECTOR	2	^10*1/4PT		BMC10-1/4
20	멜호스유니온	MALE HOSE UNION	2	^10*1/2-20UNF		BHUM10-02G
21	오리피스조립품(31S)	ORIFICE ASSEMBLY	2			31S71210
22	프랑스오리피스	ORIFICE ADAPTER	2	19*19*55L	52XG11A/53XG11A	31S71202
23	철니플(일자)	STEEL NIPPLE(ST)	2	PT1/4*PT1/4		HMCM-1/4-1/4S
24	오리피스스프링	ORIFICE SPRING	2	^1*^9*^11*8C*18L	52XG12A/53XG12A	31S71203
25	오리피스	ORIFICE	2	9*9*8L,(^1.2)	52XG13A/53XG13A	31S71201
26	하부록커아암	BOTTOM LOCK ARM	4	16t*111*570	52XG14A/53XG14A	52G04528
27	상부록커아암	UPPER LOCK ARM	4	16t*102.5*591.5	52XG15A/53XG15A	52G05010
28	상부록커아암제관품(R/L)	UPPER LOCK ARM(R/L)	2(R1/L1)		53XG30A	53G05300
29	안전록커상판	UPPER LOCK ARM SUPPORTER	2	6t*55*122*124	52XG16A/53XG16A	52G05020/53G05020
30	둥근머리십자볼트	ROUND HEAD BOLT	12	M6*10L		RHCBM0610
31	스프링와샤	SPRING WASHER	12	M6		WSM06
32	둥근머리렌치볼트	ROUND HEAD WRENCH BOLT	8	M12*25L		WRBM1225
33	스프링와샤	SPRING WASHER	16	M12		WSM12
34	하부록크아암지지대	BOTTOM LOCK ARM SUPPORTER	2	9t*124*127*131	52XG17A/53XG17A	L5BAG130
35	둥근머리렌치볼트	ROUND HEAD WRENCH BOLT	8	M12*30L		WRBM1230
36	잭에어실린더고정대	JACK AIR CYLINDER BRACKET	2	3.2t*38*50*84	52XG19A	51G95100
	메인록커해제에어실린더고정판	LOCK RELEASE AIR CYLINDER BRACKET	2	3.2t*38*84*85	53XG19A	53G95100
37	근접센서고정대(52F/53G)	PROXIMITY SENSOR BRACKET(52F/53G)	2	2.3t*30*76	53XG18A	52F04590
38	하네스(근접센서1)(원형)	HARNESS(PROXIMITY SENSOR 1)	2	120L	53XW10A	52F10380
39	실린더제관품(슬레이브)	TUBE(SLAVE)	2			52X0G201
40	로드봉제관품(슬레이브)	ROD BAR(SLAVE)	2			52X0G202
41	피스톤(슬레이브)	PISTON(SLAVE)	2	^89*42.5L	52XG23A/53XG23A	52X0G230
42	U-팩킹(유압용)	U-PACKING	2	^90*^80*6B		UHP908006
43	웨어링(POLY)	WEAR RING(POLY)	2	^90*^85*2.5t*15H		WEAR908515P
44	O-링(유압용)	O-RING	2	P40		ORP40
45	헤드카바(슬레이브)	HEAD COVER(SLAVE)	2	^100*41L	52XG24A/53XG24A	52X0G240
46	더스트시일(DHS40)	DUST SEAL(DHS40)	2	^40*^48*6.5/5B		DHS4048065
47	DU베어링	DU BUSHING	2	DU4030		DU4030
48	철니플(일자)(천)	STEEL NIPPLE(ST)	2	PT1/4*05U		HMCM-1/4-05U
49	오리피스가이드	ORIFICE GUIDE	2	^20*^13.5*5t	52XG27A/53XG27A	52F71205
50	인장코일스프링(에어호스리턴용)	EXTENSION SPRING	2	^0.8*^14*65C	52XG38A/53XG38A	52N53628
51	케이블홀더(1)	CABLE HOLDER(1)	2	1.6t*18*50*50	52XG41A/53XG41A	L5BAG410
52	트러스머리탭핑볼트(TH3종)	TRUSS HEAD TAPPING BOLT	4	M5*13L		TRTBM0513
53	케이블홀더(2)	CABLE HOLDER(2)	2	2.3t*25*50*53	52XG42A/53XG42A	L5BAG420
54	록커해제에어실린더조립품	LOCK RELEASE AIR CYLINDER ASSEMBLY	2		52XU00A/53XU00A	52F00350
55	록커해제에어실린더	TUBE(LOCK RELEASE AIR CYLINDER)	2	^35*58L	52XU02A/53XU02A	30N93120
56	원터치공압니플(엘보)	ONE TOUCH AIR NIPPLE(ELBOW)	2	M5*90도*^4		EC0504E
57	스냅링(구멍용)	CIRCLIP	2	CR25		SN-CR25
58	둥근머리십자볼트	ROUND HEAD BOLT	8	M4*10L		RHCBM0410
59	스프링와샤	SPRING WASHER	8	M4		WSM04
60	록커해제실린더피스톤	PISTON(LOCK RELEASE AIR CYLINDER)	2	^20*49L	52XU03A/53XU03A	52F00353
61	O-링	O-RING	2	P16		ORP16
62	록커해제에어실린더스프링	LOCK RELEASE AIR CYLINDER SPRING	2	^18.4*^16*^36L*5C	52XU05A/53XU05A	30N93150
63	록커해제에어실린더헤드카바	HEAD COVER(LOCK RELEASE AIR CYLINDER)	2	^25*4.5L	52XU06A/53XU06A	30N93160
64	에어실린더로드가이드봉	AIR CYLINDER ROD GUIDE BAR	2	^11*10L	52XU07A/53XU07A	42F04759
65	실린더조립품(마스터)	CYLINDER ASSEMBLY(MASTER)	2		52XG00A/53XG00A	52X0G003
66	실린더조립품(슬레이브)	CYLINDER ASSEMBLY(SLAVE)	2		52XG20A/53XG20A	52X0G203
67	52X-실린더시일링킷트(마스터)	52X-CYLINDER SEAL KIT(MASTER)	2			52X0G004
68	52X-실린더시일링킷트(슬레이브)	52X-CYLINDER SEAL KIT(SLAVE)	2			52X0G204

07(Tire stopper inground)

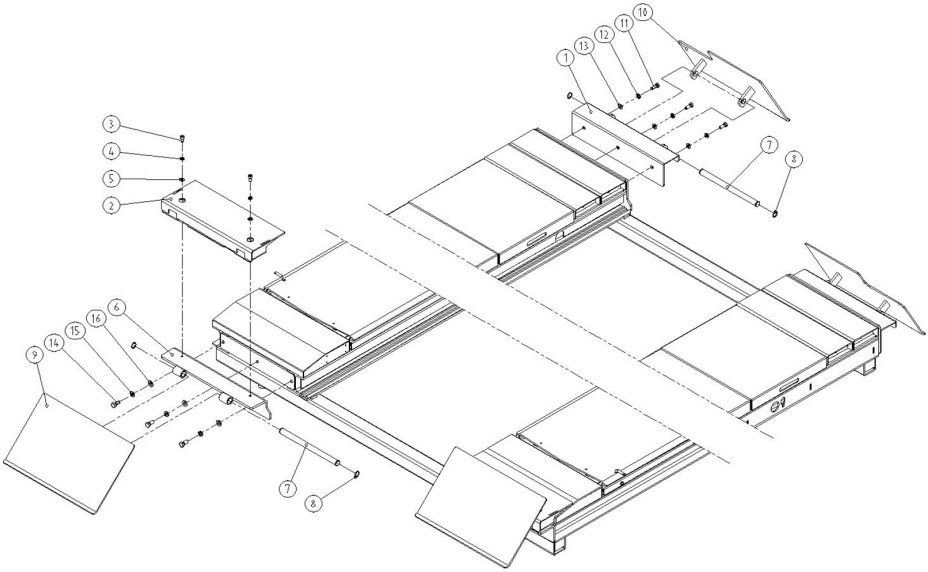

번호	품명(한글)	품명(영문)	수량	규격	도번	품번
NO.	PART NAME	PART NAME	Q'TY	SPECIFICATION	DWG.NO.	ITEM NO.
1	타이어스톱퍼베이스제관품(매립)	TIRE STOPPER BASE(IN-GROUND)	2		52XB70A/53XB70A	52G54000
2	매립보조승강장(2)제관품	IN-GROUND AUXILIARY PLATFORM	2		52XB90A/53XB90A	52G90400
3	렌치볼트	WRENCH BOLT	4	M10*20L		WBM1020
4	스프링와샤	SPRING WASHER	4	M10		WSM10
5	평와샤	PLAIN WASHER	4	M10		WPM10
6	센터롤링잭크로스보강대(1)제관(R/L)	CENTER ROLLING JACK CROSS BAR(1)(R/L)	2(R1/L1)		52XD20A/53XD20A	52G50010/52G50030
7	타이어스톱퍼경첩핀(매립)	TIRE STOPPER HINGE PIN(IN-GROUDN)	4	^25*354.8L	52XH05A/53XH05A	52G07522
8	스냅링	CIRCLIP	8	CS25		SN-CS25
9	타이어스톱퍼(1)제관품	TIRE STOPPER(1)	2		52XH10A/53XH10A	52G51000
10	타이어스톱퍼(2)제관품(R/L)	TIRE STOPPER(2)(R/L)	2(R1/L1)		52XH20A/53XH20A	52G52000/52G52001
11	육각볼트	HEX BOLT	6	M12*30L		HEXM1230
12	스프링와샤	SPRING WASHER	6	M12		WSM12
13	평와샤	PLAIN WASHER	6	M12		WPM12
14	육각볼트	HEX BOLT	6	M14*30L		HEXM1430
15	스프링와샤	SPRING WASHER	6	M14		WSM14
16	평와샤	PLAIN WASHER	6	M14		WPM14

08(Tire stopper onground)

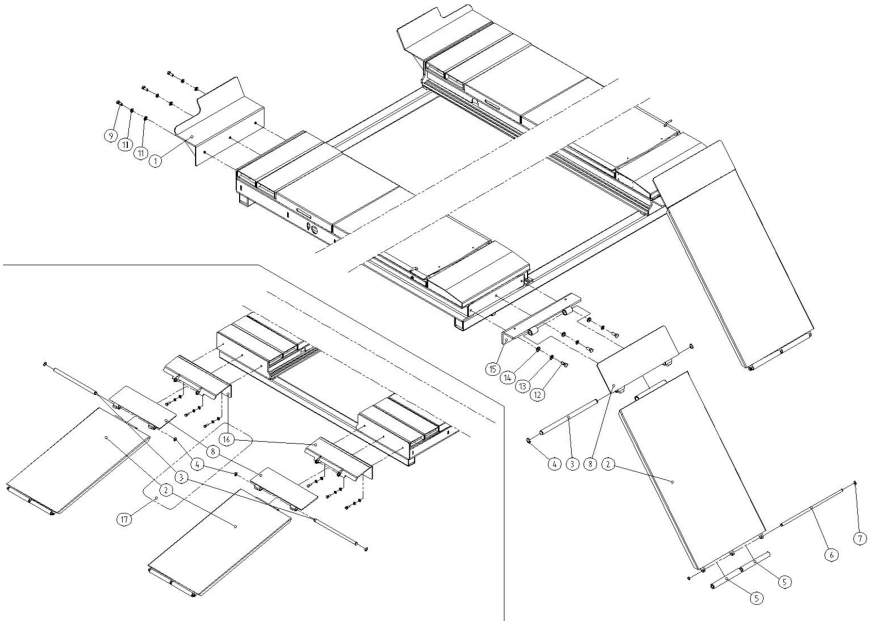

번호	품명(한글)	품명(영문)	수량	규격	도번	품번
NO.	PART NAME	PART NAME	Q'TY	SPECIFICATION	DWG.NO.	ITEM NO.
1	타이어스톱퍼제관품(R/L)	TIRE STOPPER(R/L)	2(R1/L1)		52XH50A/53XH50A	52G75000/52G75001
2	부착형진입판제관품	RAMP	2		52XL00A/53XL00A	52G05510
3	진입판경첩핀	RAMP HINGE PIN	2	^25*462.8L	52XL07A/53XL07A	52G05520
4	스냅링	CIRCLIP	4	CS25		SN-CS25
5	부착형진입판롤러	RAMP ROLLER	4	^30*^16*228L	52XL08A/53XL08A	33J61200
6	부착형진입판롤러핀	RAMP ROLLER PIN	2	^15*511.4L	52XL09A/53XL09A	52G61300
7	스냅링	CIRCLIP	4	CS15		SN-CS15
8	연결진입판제관품	CONNECT RAMP	2		52XP00A/53XP00A	52G06100
9	육각볼트	HEX BOLT	6	M12*30L		HEXM1230
10	스프링와샤	SPRING WASHER	6	M12		WSM12
11	평와샤	PLAIN WASHER	6	M12		WPM12
12	육각볼트	HEX BOLT	6	M14*30L		HEXM1430
13	스프링와샤	SPRING WASHER	6	M14		WSM14
14	평와샤	PLAIN WASHER	6	M14		WPM14
15	센터롤링잭크로스보강대(1)제관(R/L)	CENTER ROLLING JACK CROSS BAR(1)(R/L)	2(R1/L1)		52XD20A/53XD20A	52G50010/52G50030
16	양방향진입브라켓제관품	BOTH SIDES RAMP BRACKET	2		52XH30A/53XH30A	52G58235
17	양방향부착형진입판조립KIT-선택사양	BOTH SIDES RAMP ASSEMBLY KIT-OPTION	1			52G58270

09(Side slip)

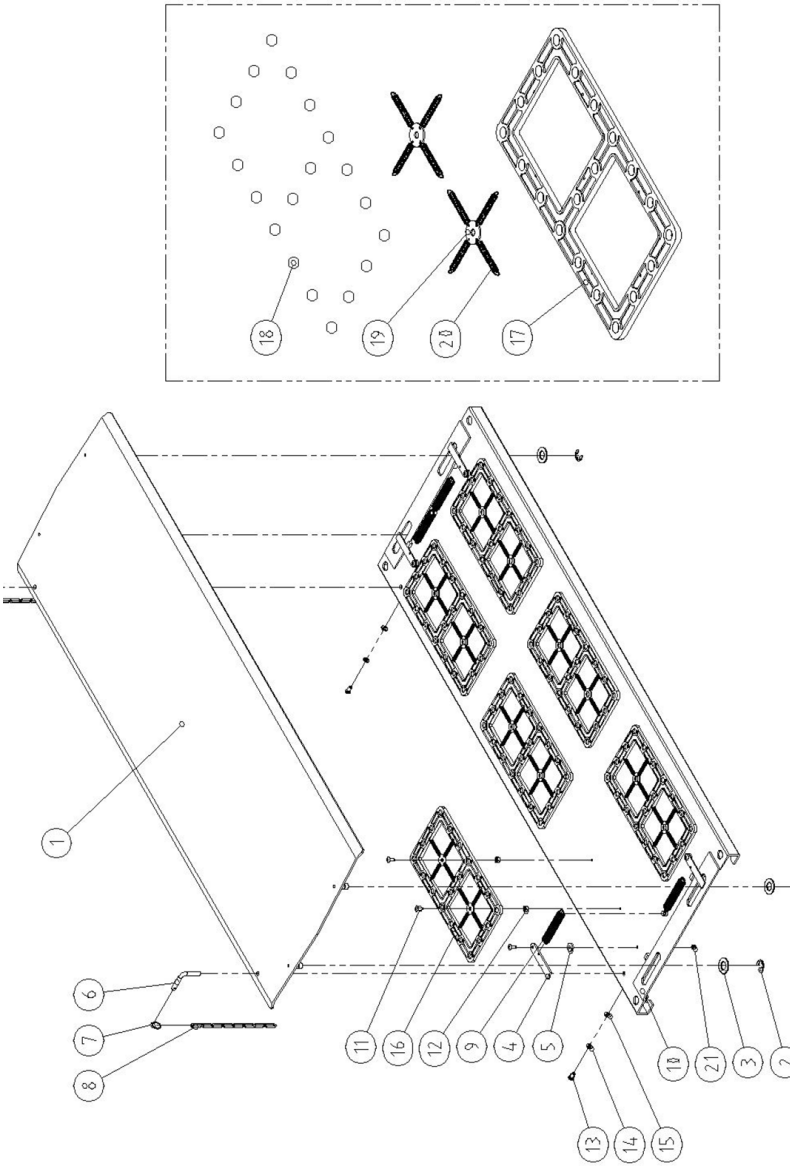

번호	품명(한글)	품명(영문)	수량	규격	도번	품번
NO.	PART NAME	PART NAME	Q'TY	SPECIFICATION	DWG.NO.	ITEM NO.
1	사이드슬립판제관품	SIDE SLIP PLATE	2		52XJ00A/53XJ00A	52G06000
2	스냅링(E-링)	E-RING	8	E-15		SN-E15
3	평와샤	PLAIN WASHER	8	M20(^40*^21*2.6t)		WPM20
4	사이드슬립스프링걸이대	SIDE SLIP SPRING HOLDER	8	3.2t*20*110	52XJ04A/53XJ04A	52G06050
5	보조승강장와샤	SIDE SLIP SPRING HOLDER WASHER	8	^20*4.5t	52XJ05A/53XJ05A	52G06060
6	사이드슬립판록커	SIDE SLIP PLATE LOCKER	4	^10*60*60L	52XJ06A/53XJ06A	51G10237
7	3연결링	JOIN RING	4	^24	52XJ06A/53XJ06A	51G10239
8	체인	CHAIN	4	^3*12*35	52XJ06A/53XJ06A	51G10242
9	리턴스프링	RETURN SPRING	8	^13*^1.5*128L	52XJ09A/53XJ09A	52G06070
10	사이드슬립판베이스제관품	SIDE SLIP PLATE BASE	2		52XJ10A/53XJ10A	52G06600
11	트러스머리십자볼트	TRUSS HEAD BOLT	32	M6*20L		TRTBM0620
12	육각너트	HEX NUT	24	M8		HNM08
13	둥근머리십자볼트	ROUDN HEAD BOLT	4	M8*15L		RHCBM0815
14	스프링와샤	SPRING WASHER	4	M8		WSM08
15	평와샤	PLAIN WASHER	4	M8		WPM08
16	슬라이드볼판조립품	SLIDE BALL PLATE ASS'Y	12		52XJ30A/53XJ30A	51G00315
17	슬라이드볼판	SLIDE BALL PLATE	12	8.5*195*378	52XJ31A/53XJ31A	51G00320
18	슬라이드볼	SLIDE BALL	240	^15	52XJ32A/53XJ32A	51G00330
19	스프링고정걸이	SPRING HOLDER	24	^30*2t	52XJ33A/53XJ33A	51G00340
20	슬라이드판스프링	SLIDE PLATE SPRING	96	^8*^0.8*37C*45.5L	52XJ34A/53XJ34A	51G00350
21	육각너트	HEX NUT	8	M6		HNM06

10(Central block)

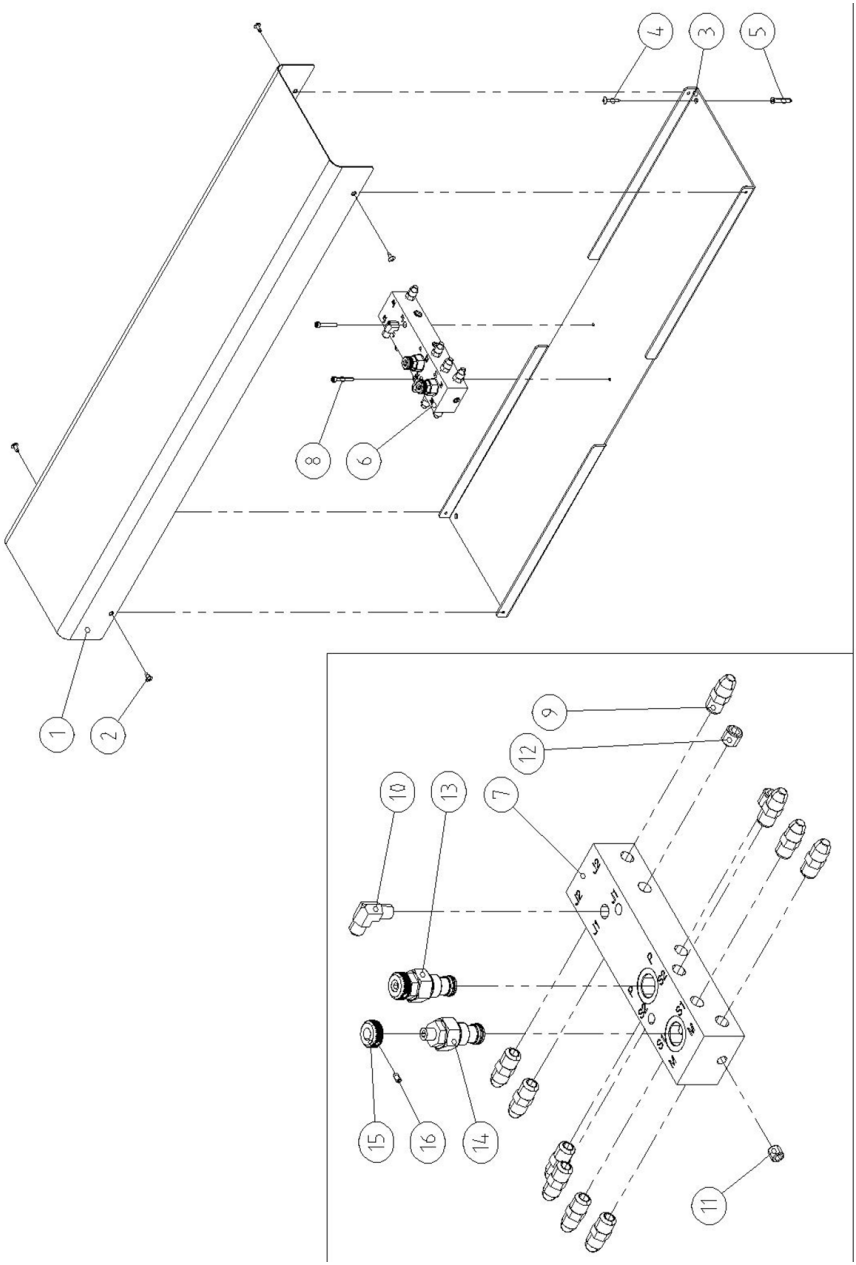

번호	품명(한글)	품명(영문)	수량	규격	도번	품번
NO.	PART NAME	PART NAME	Q'TY	SPECIFICATION	DWG.NO.	ITEM NO.
1	유압블럭덮개	HYDRAULIC BLOCK COVER	1	1.6t*80*235*1080	52XO21A/53XO21A	52X0O210
2	트러스머리탭핑볼트(TH3종)	TRUSS HEAD TAPPING BOLT	4	M5*13L		TRTBM0513
3	유압블럭베이스	HYDRAULIC BLOCK BASE	1	3.2t*25*230*980	52XO22A/53XO22A	52X0O220
4	콘크리트못	SCREW	4	^5*30L		CN-0530
5	칼블록	NYLON PLUG	4	^5		CBW-05
6	중간블럭조립품	CENTRAL BLOCK ASSEMBLY	1		52XO30A/53XO30A	52X0O300
7	중간유압블럭	CENTRAL BLOCK	1	40*55*220	52XO31A/53XO31A	52X0O310
8	렌치볼트	WRENCH BOLT	2	M5*35L		WBM0535
9	철니플(일자)(천)	STEEL NIPPLE(ST)	10	PT1/4*05U		HMCM-1/4-05U
10	철니플(엘보)	STEEL NIPPLE(EL)	1	PT1/4*05U		HMCM-1/4-05UE
11	막음플러그	LOCKING BOLT	1	PF1/8(플러그용)		STPLUG-1
12	매꾸라 렌치용 볼트	LOCKING BOLT	2	PT1/4*11L		MWBU1-4-11
13	니들밸브(노브2)	NEEDLE VALVE(KNOB2)	2	3/4-16UNF	52XO32A/53XO32A	NDL-V/V-047-N2
14	니들밸브	NEEDLE VALVE	2	3/4-16UNF	52XO32A/53XO32A	NDL-V/V-047
15	다이얼핸들(니들밸브용)	DIAL HANDLE(FOR NEEDLE VALVE)	2	^22*9L	52XO32A/53XO32A	NDL-V/V-DIAL
16	무두렌치볼트	SET SCREW	2	M4*8L		MWBM0408

11(Control panel-52X)

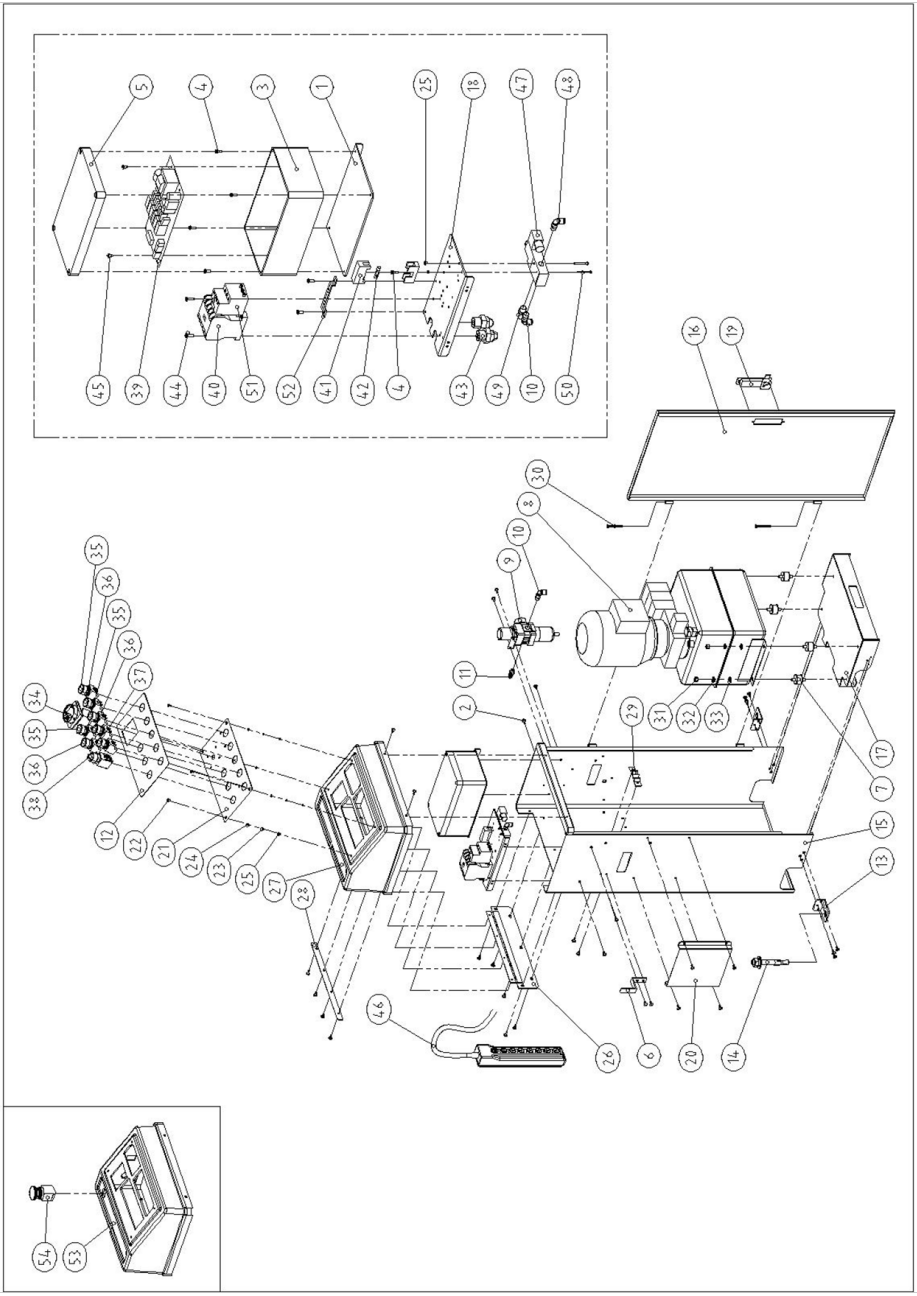

번호	품명(한글)	품명(영문)	수량	규격	도번	품번
NO.	PART NAME	PART NAME	Q'TY	SPECIFICATION	DWG.NO.	ITEM NO.
1	P.C.B고정판	P.C.B FIXING PLATE	1	2.3tx20x158x250	52XQ21A	51G80535
2	트러스머리탭핑볼트(TH3종)	TRUSS HEAD TAPPING BOLT	31	M5x13L		TRTBM0513
3	콘트롤박스하판	CONTROL BOX BOTTOM PLATE	1	150x250x80	52XQ22A	51G80550
4	둥근머리십자볼트	ROUND HEAD BOLT	7	M4x12L		RHCBM0412
5	콘트롤박스상판	CONTROL BOX UPPER PLATE	1	150x250x20	52XQ23A	51G80540
6	리모콘걸고리	REMOTE CONTROLLER HANGER	1	3tx19x50x100	52XQ14A	30N80110
7	양볼트방진고무	VIBRATION PROOF RUBBER	4	Ø30x20HxM8x45L,경도65,네오프렌	52XQ20A	30N80100
8	파워팩조립품	POWER PACK ASSEMBLY	1	220V/380V/415V-1P/3P-50Hz/60Hz-2J	52XQ25A	52G80100~52G85700
9	에어레귤레이터	AIR REGULATOR	1	TAW-3000-02BG	52XQ24A	TAW-3000-02BG
10	원터치공압니플(엘보)	ONE TOUCH AIR NIPPLE(EL)	2	PT1/4x6x4x엘보		EC64PT1/4EL
11	카플러(상아)-MCM	COUPLER	1	20PM		CP-8M20
12	판넬외관용필름	PANEL UPPER COVER FILM	1	0.5tx163x326	52XQ08A	
13	앙카볼트브라켓	ANCHOR BOLT BRACKET	2	3.2tx30x50x60	52XQ13A	52F10090
14	웨지앙카볼트	WEDGE ANCHOR BOLT	2	M16*125L		ANCW-16-125
15	콘트롤패널몸체-신형(통합형)	CONTROL PANEL BODY	1	2.3tx271.1x401.6x850.3	52XQ01A	32X96000
16	콘트롤패널앞판	CONTROL PANEL FRONT PLATE	1	2.3tx20x401.6x815	52XQ03A	31X89030
17	콘트롤패널베이스	CONTROL PANEL BASE	1	3.2tx54x265x394	52XQ18A	31X89040
18	전기부품고정판	ELECTRIC PARTS PLATE	1	2.3tx20x135x240	52XQ16A	32X89600
19	도아키이셋트	DOOR KEY SET	1	16x28x116	52XQ04A	52F10110
20	메뉴얼포켓	MANUAL POCKET	1	1.6tx20x180x200	52XQ15A	31S79310
21	패널전면판	PANEL UPPER FRONT PLATE	1	1tx163x326	52XQ07A	31X89050
22	접시머리십자볼트	C'SINK BOLT	4	M3x10L		RHCDBM0310
23	스프링와샤	SPRING WASHER	4	M3		WSM03
24	평와샤	PLAIN WASHER	4	M3		WPM03
25	육각너트	HEX NUT	6	M3		HNM03
26	패널경첩제관품	PANEL HINGE	1		52XQ09A	31X89060
27	콘트롤패널상판(31X)	CONTROL PANEL UPPER COVER	1	5tx163x304x4.5	52XQ06A	31X89070
28	ABS카바조립보호대	ABS COVER PROTECTOR	1	2.3tx19x351.2	52XQ12A	31X89080
29	전선홀더	CABLE HOLDER	1	1.6tx11.1x20x86.5	52XQ19A	33X80050
30	경첩핀	HINGE PIN	2	Ø6x50L		L5BAQ180
31	육각너트	HEX NUT	4	M8		HNM08
32	스프링와샤	SPRING WASHER	4	M8		WSM08
33	평와샤	PLAIN WASHER	4	M8		WPM08
34	캠스위치(3선식표준파워스위치)	CAM SWITCH	1	YMW26-20/04		90000150
35	누름버튼스위치 백색	PUSH BUTTON SWITCH WHITE	3	(Ø25 평면)		KP5BRRFW10S
36	누름버튼스위치 흑색	PUSH BUTTON SWITCH BLACK	3	(Ø25 평면)		KP5BRRFBK10S
37	누름버튼스위치 녹색	PUSH BUTTON SWITCH GREEN	1	(Ø25 평면)		KP5BRRFG10S
38	파이롯램프-TKRWP	PILOT LAMP-TKRWP	1	Ø25x220V		KL5BRRGA2
39	PCB(MICOM,51G)HYD.TYPE	PCB(MICOM,51G)HYD.TYPE	1			51G80052
40	전자개폐기	MAGNET SWITCH	1	MUD-20 5A		MUD-20
41	휴즈홀더GLASS	FUSE HOLDER	1	250V1P		FHG-250-1P
42	휴즈	FUSE	1	250V2A		F-250V2A
43	케이블록커	CABLE LOCKER	2	NEC-01-12A(조립부Ø17)		NEC-01-12A
44	둥근머리십자볼트	ROUND HEAD BOLT	2	M4x16L		RHCBM0416
45	트러스머리십자볼트	TRUSS HEAD BOLT	2	M5x8L		TRTBM0508
46	리모콘제작품(잭2개)	REMOTE CONTROLLER(JACK2)	1	HY-1028,9M	52XW17A	51G96000
	리모콘제작품(KCs)	REMOTE CONTROLLER(KCS TYPE)	1	0.75SQ*10C*9000L 비상스위치있음	52XW10A	52X0W100
47	에어솔레노이드밸브	AIR SOLENOID VALVE	1	3V210-08-N0 AC230V		35S95050
48	원터치공압니플(엘보)	ONE TOUCH AIR NIPPLE(EL)	1	PT1/4xØ4xØ2.5		EC425PT1/4E
49	싸이렌서	SILENCER	1	PT1/4x22H		SILENC-PT1/4*22H
50	둥근머리십자볼트	ROUND HEAD BOLT	2	M3x30L		RHCBM0330
51	OCR(THERMO-RELAY)	OCR(THERMO-RELAY)	1	DTH-20		OCRDTH20
52	어스플레이트	EARTH PLATE	1	10x3tx10x110	52XQ17A	42F80090
53	콘트롤패널상판(KCs)	CONTROL PANEL UPPER COVER(KCS TYPE)	1	5tx163x304x4.5	52XQ06A	52X0Q060
54	비상누름버튼스위치	EMERGENCY PUSH BUTTON SWITCH	1	KH-3046ER(250V 6A)		KH-3046ER

12(Control panel-53X)

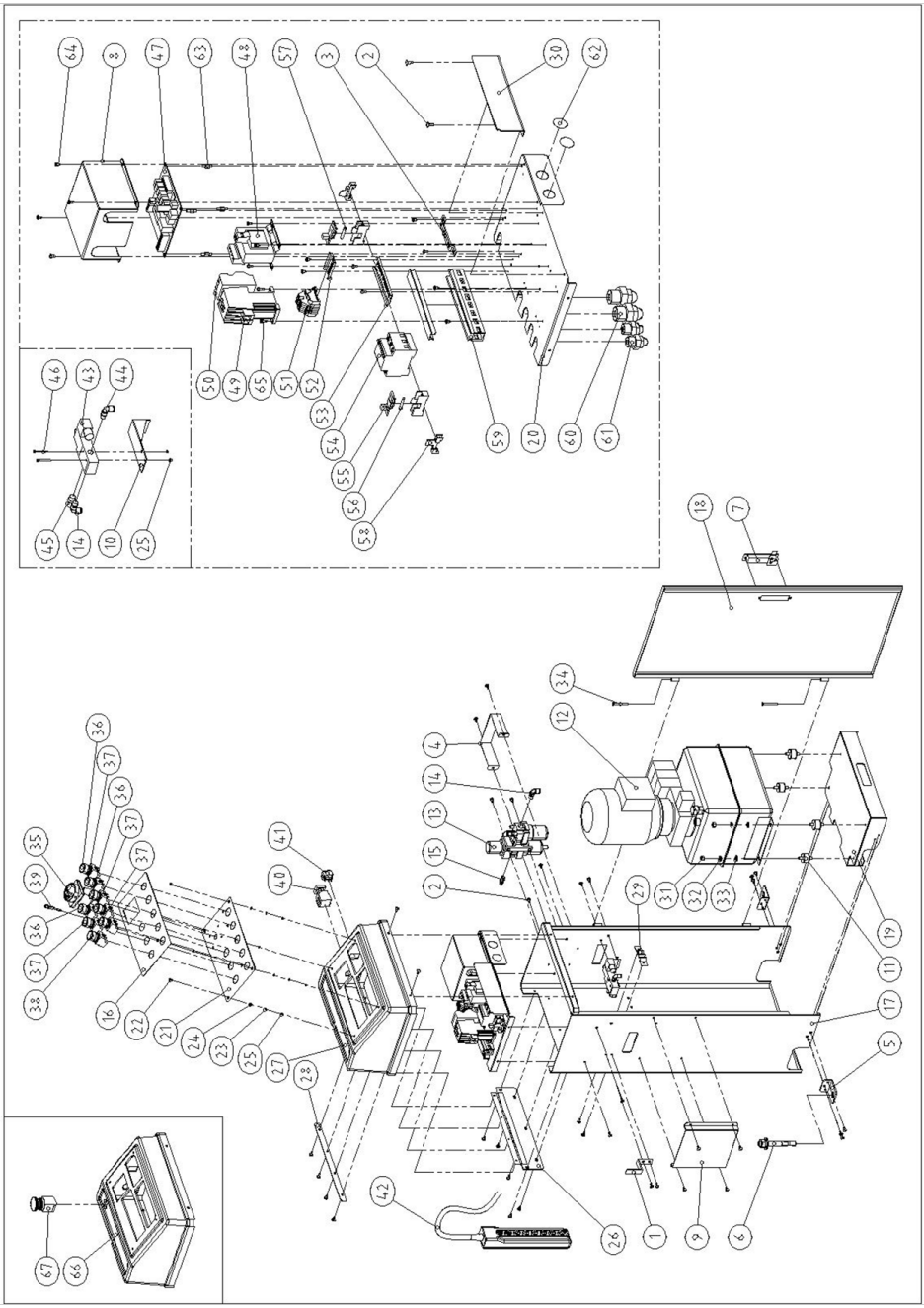

번호	품명(한글)	품명(영문)	수량	규격	도번	품번
NO.	PART NAME	PART NAME	Q'TY	SPECIFICATION	DWG.NO.	ITEM NO.
1	리모콘걸고리	REMOTE CONTROLLER HANGER	1	3tx19x50x100	53XQ14A	30N80110
2	트러스머리탭핑볼트(TH3종)	TRUSS HEAD TAPPING BOLT	37	M5x13L		TRTBM0513
3	어스플레이트	EARTH PLATE	1	10x3tx10x110	53XQ17A	42F80090
4	레귤레타보호커바	REGULATOR PROTECTOR	1	1.6tx35x106x162	53XQ21A	31S80094
5	앙카볼트브라켓	ANCHOR BOLT BRACKET	2	3.2tx30x50x60	53XQ13A	52F10090
6	웨지앙카볼트	WEDGE ANCHOR BOLT	2	M16*125L		ANCW-16-125
7	도아키이셋트	DOOR KEY SET	1	16x28x116	53XQ04A	52F10110
8	콘트롤PCB보호카바	CONTROL PCB PROTECT COVER	1	1.6tx90x145.8x171	53XQ23A	52N54618
9	메뉴얼포켓	MANUAL POCKET	1	1.6tx20x180x200	53XQ15A	31S79310
10	에어솔레노이드받침대	AIR SOLENOID BRACKET	1	1.6tx40x40x120	53XQ25A	31S79410
11	양불트방진고무	VIBRATION PROOF RUBBER	4	Ø30x20HxM8x45L,경도65,네오프렌	53XQ20A	30N80100
12	파워팩조립품	POWER PACK ASSEMBLY	1	220V/380V/415V-1P/3P-50Hz/60Hz-0/1/2/	53XQ26A	53G80100~53G85700
13	에어유니트	AIR UNIT	1	TAC-3010-02G	53XQ24A	90000070
14	원터치공압니플(엘보)	ONE TOUCH AIR NIPPLE(EL)	2	PT1/4x6x4x엘보		EC64PT1/4EL
15	카플러(상이)-MCM	COUPLER	1	20PM		CP-8M20
16	판넬외관용필름	PANEL UPPER COVER FILM	1	0.5tx163x326	53XQ08A	
17	콘트롤패널몸체-신형(통합형)	CONTROL PANEL BODY	1	2.3tx271.1x401.6x850.3	53XQ01A	32X96000
18	콘트롤패널앞판	CONTROL PANEL FRONT PLATE	1	2.3tx20x401.6x815	53XQ03A	31X89030
19	콘트롤패널베이스	CONTROL PANEL BASE	1	3.2tx54x265x394	53XQ18A	31X89040
20	전기부품고정판	ELECTRIC PARTS PLATE	1	1.6tx54.1x263.5x394	53XQ16A	53G89130
21	패널전면판	PANEL UPPER FRONT PLATE	1	1tx163x326	53XQ07A	31X89050
22	접시머리십자볼트	C'SINK BOLT	4	M3x10L		RHCDBM0310
23	스프링와샤	SPRING WASHER	4	M3		WSM03
24	평와샤	PLAIN WASHER	4	M3		WPM03
25	육각너트	HEX NUT	6	M3		HNM03
26	패널경첩제관품	PANEL HINGE	1		53XQ09A	31X89060
27	콘트롤패널상판	CONTROL PANEL UPPER COVER	1	5tx163x304x4.5	53XQ06A	53G89070
28	ABS카바조립보호대	ABS COVER PROTECTOR	1	2.3tx19x351.2	53XQ12A	31X89080
29	전선홀더	CABLE HOLDER	1	1.6tx11.1x20x86.5	53XQ19A	33X80050
30	콘트롤러손보호대	CONTROLLER HAND PROTECTOR	1	1.6tx17x63.4x227	53XQ22A	33X89150
31	육각너트	HEX NUT	4	M8		HNM08
32	스프링와샤	SPRING WASHER	4	M8		WSM08
33	평와샤	PLAIN WASHER	4	M8		WPM08
34	경첩핀	HINGE PIN	2	Ø6x50L		L5BAQ180
35	캠스위치(3선식표준파워스위치)	CAM SWITCH	1	YMW26-20/04		90000150
36	누름버튼스위치 백색	PUSH BUTTON SWITCH WHITE	3	(Ø25 평면)		KP5BRRFW10S
37	누름버튼스위치 흑색	PUSH BUTTON SWITCH BLACK	4	(Ø25 평면)		KP5BRRFBK10S
38	누름버튼스위치 녹색	PUSH BUTTON SWITCH GREEN	1	(Ø25 평면)		KP5BRRFG10S
39	LED표시용홀더	LED LAMP	1	LD-HB8L(RED)DC24V		90000710
40	부져	BUZZER	1	Ø25 ADS(DC12/24V)		31S80060
41	시소스위치(LAMP BUTTON)	SEESAW SWITCH(LAMP BUTTON)	1	DJR602-4210(LF)		DJR602-4210(LF)
42	리모콘제작품(잭2개)	REMOTE CONTROLLER(JACK2)	1		53XW20A	53G96000
	리모콘제작품(KCs)	REMOTE CONTROLLER(KCS TYPE)	1	0.75SQ*12C*10000L 비상스위치있음	53XW12A	53X0W120
43	에어솔레노이드밸브	AIR SOLENOID VALVE	1			52N57351
44	원터치공압니플(엘보)	ONE TOUCH AIR NIPPLE(EL)	1	PT1/4xØ4xØ2.5		EC425PT1/4E
45	싸이렌서	SILENCER	1	PT1/4x22H		SILENC-PT1/4*22H
46	둥근머리십자볼트	ROUND HEAD BOLT	2	M3x30L		RHCBM0330
47	PCB(MICOM,53G)VER.2	PCB(MICOM,53G)VER.2	1			53G80055
48	트랜스포머 400/230x0/18	TRANSFORMER 400/230x0/18	1	128VA ST-BASE		52F79020
49	마그네트S/W	MAGNET SWITCH	1	GMC(D)-12		90000041
50	OCR(THERMO-RELAY)	OCR(THERMO-RELAY)	1	9-12A		52F00710
51	터미널블럭(YELLOW/GREEN)	TERMINAL BLOCK(YELLOW/GREEN)	1	334 120		52F00720
	터미널블럭(BLUE)	TERMINAL BLOCK(BLUE)	1	20A(KLEMSAN,2.54mm)		52F00730
	터미널블럭(GREY)	TERMINAL BLOCK(GREY)	3	304 120		52F00740
52	찬넬	CHANNEL	1	SH-Cx50L		C50SHC
53	찬넬	CHANNEL	1	SH-Cx115L		C115SHC
54	배선용차단기	CIRCUIT BREAKER	1	ABE33/20		30H94115
55	휴즈홀더(HY-FIS)250V 1~30A 1P	FUSE HOLDER(HY-FIS)250V 1~30A 1P	2			90000015
56	휴즈	FUSE	1	250V1A		F-250V1A
57	휴즈	FUSE	1	250V5A		F-250V5A
58	스톱퍼(레일용)	STOPPER(FOR RAIL)	2			30H94130
59	케이블덕트(BODY/COVER)	CABLE DUCT(BODY/COVER)	1	30x60x180		L5BAQ003
60	케이블록커	CABLE LOCKER	2	NEC-01-20A(조립부Ø26)		NEC-01-20A
61	케이블록커	CABLE LOCKER	2	NEC-01-12A(조립부Ø17)		NEC-01-12A
62	플라스틱캡(구멍용-흑색)	PLASTIC CAP(FOR HOLE-BLACK)	2	Ø25		PCAP25
63	볼트서포트	BOLT SUPPORT	4	DABS-6R		DABS-6R
64	트러스머리십자볼트	TRUSS HEAD BOLT	16	M4x8L		TRTBM0408
65	둥근머리십자볼트	ROUND HEAD BOLT	2	M4x12L		RHCBM0412
66	콘트롤패널상판(KCs)	CONTROL PANEL UPPER COVER(KCS TYPE)	1	5tx163x304x4.5	53XQ06A	53X0Q060
67	비상누름버튼스위치	EMERGENCY PUSH BUTTON SWITCH	1	KH-3046ER(250V 6A)		KH-3046ER

13(Center rolling jack cross bar)

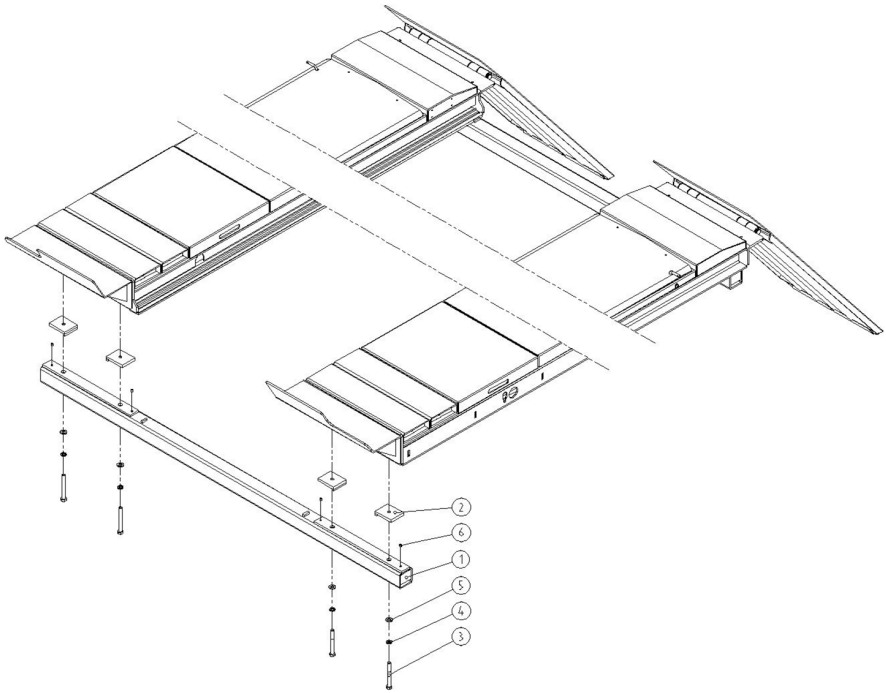

번호	품명(한글)	품명(영문)	수량	규격	도번	품번
NO.	PART NAME	PART NAME	Q'TY	SPECIFICATION	DWG.NO.	ITEM NO.
1	센터롤링잭크로스보강대제관품	CENTER ROLLING JACK CROSS BAR	2		52GX50H	52G53100
2	클립판제관품	CLIP PLATE	8		52GX50H	52F50025
3	육각볼트	HEX BOLT	8	M14x120L		HEXM14120
4	스프링와샤	SPRING WASHER	8	M14		WSM14
5	평와샤	PLAIN WASHER	8	M14		WPM14
6	무두렌치볼트	SET SCREW	8	M8x10L		MWBM0810

14(Pit frame)

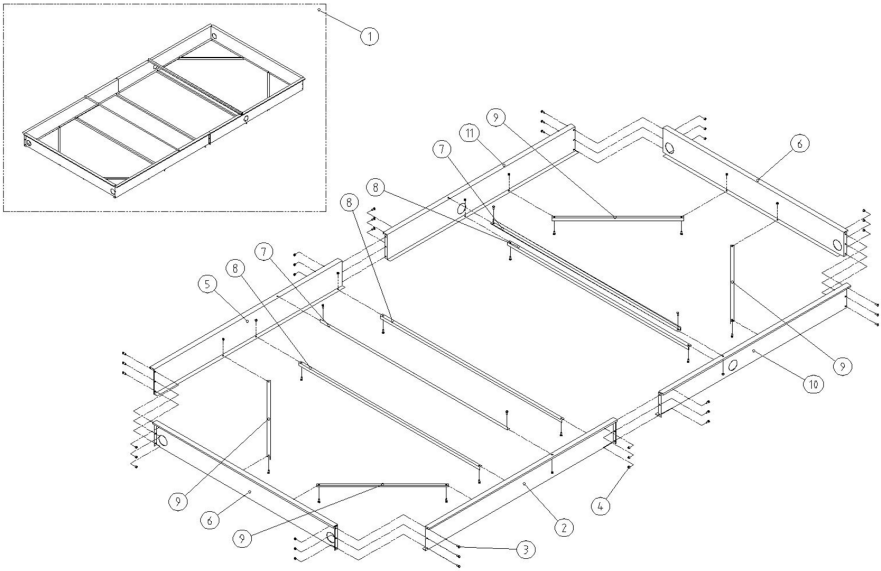

번호	품명(한글)	품명(영문)	수량	규격	도번	품번
NO.	PART NAME	PART NAME	Q'TY	SPECIFICATION	DWG.NO.	ITEM NO.
1	매립케이스조립품(52G/53G)	PIT FRAME ASSEMBLY(52G/53G)	1		52XA10A/53XA10A	52G79995/53G79995
2	PIT FRAME 1	PIT FRAME 1	1	1.6t*88.4*262*2306.6	52XA11A/53XA11A	
3	육각볼트	HEX BOLT	36	M10*25L		HEXM1025
4	육각너트	HEX NUT	36	M10		HNM10
5	PIT FRAME 2	PIT FRAME 2	1	1.6t*88.4*262*2306.6	52XA12A/53XA12A	
6	PIT FRAME 3	PIT FRAME 3	2	1.6t*88.4*262*2220	52XA13A/53XA13A	
7	PIT FRAME 4	PIT FRAME 4	2	1.6t*30*30*2300	52XA14A/53XA14A	
8	PIT FRAME 5	PIT FRAME 5	3	1.6t*30*30*2223	52XA15A/53XA15A	
9	PIT FRAME 2-6	PIT FRAME 2-6	4	1.6t*30*30*1145	52XA16A/53XA16A	
10	PIT FRAME 7	PIT FRAME 7	1	1.6t*88.4*262*2275	52XA17A/53XA17A	
11	PIT FRAME 8	PIT FRAME 8	1	1.6t*88.4*262*2275	52XA18A/53XA18A	

15(Center rolling jack)

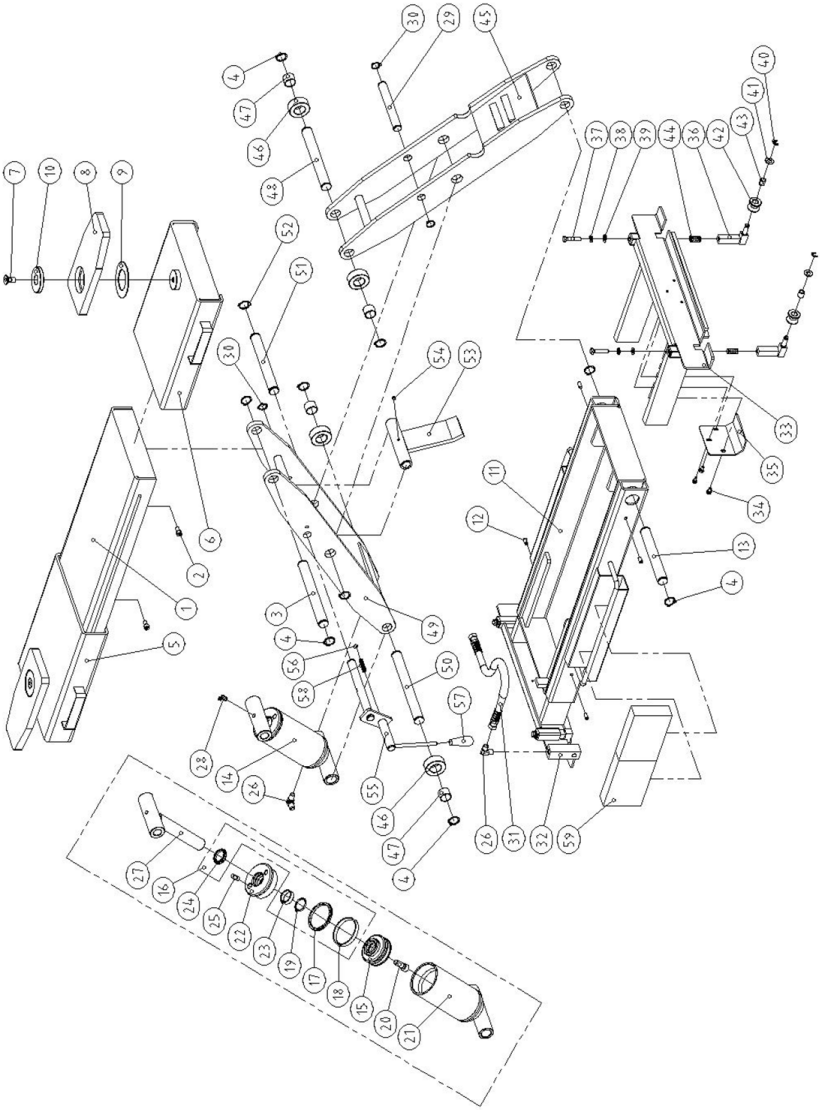

번호	품명(한글)	품명(영문)	수량	규격	도번	품번
NO.	PART NAME	PART NAME	Q'TY	SPECIFICATION	DWG.NO.	ITEM NO.
1	승강장상판제관품	PLATFORM	2		J03B00C	J0241000
2	렌치볼트	WRENCH BOLT	4	M8x15L		WBM0815
3	상부승강장고정핀	PLATFORM SHAFT	2	Ø25x214L	J03B05A	J0282000
4	스냅링	CIRCLIP	16	CS25		SN-CS25
5	잭슬라이드판(R)제관품	SLIDE PLATE(R)	2		J03C00C	J0325000
6	잭슬라이드판(L)제관품	SLIDE PLATE(L)	2		J03C00C	J0326000
7	접시머리렌치볼트	C'SINK WRENCH BOLT	4	M12x25L		WBDM1225
8	회전아암	ROTATE ARM	4	19tx120x270	J03C06B	J0279100
9	회전아암스페이서	ROTATE ARM SPACER	4	Ø90xØ52x2.3t	J03C07A	J0283100
10	회전아암축카바	ROTATE ARM SHAFT COVER	4	Ø65x9L	J03C08A	J0284000
11	베이스판제관품	BASE	2		J03D00I	J0327000
12	무두렌치볼트	SET SCREW	8	M8x15L		MWBM0815
13	하부베이스고정핀	BASE SHAFT	2	Ø25x180L	J03D08A	J0276000
14	실린더조립품	CYLINDER ASSEMBLY	2		J03E00D	J0260000
15	피스톤	PISTON	2	Ø75x38L	J03E01E	J0261130
16	잭실린더시일킷트(J06)	JACK CYLINDER SEAL KIT(J06)	2		J06S0000	
17	U-팩킹(UHP65)	U-PACKING(UHP65)	2	Ø65xØ75x6B		UHP65756
18	웨어링	WEAR RING	2	Ø70xØ75x10B		WEAR707595
19	O-링(유압용)	O-RING	2	P30		ORP30
20	렌치볼트(H)	WRENCH BOLT(H)	2	M12x30L		WBHM1230
21	호닝파이프제관품	TUBE	2	Ø75xØ88x165L		J0261200
22	헤드카바	HEAD COVER	2	Ø88x30L	J03E03B	J0261140
23	웨어링	WEAR RING	2	Ø35xØ30x10B		WEAR353010
24	더스트시일(DHS30)	DUST SEAL(DHS30)	2	Ø30xØ38x5tx6.5H		DHS303805
25	싸이렌서	SILENCER	2	PT1/8x15H		SILENC-PT1/8x15H
26	철니플(엘보)	STEEL NIPPLE(EL)	4	PT1/4x05U		HMCM-1/4-05UE
27	로드봉제관품(JACK)	ROD BAR(JACK)	2			J0261100
28	구리스니플	GREASE NIPPLE	2	PT1/8"x45°		GN-1/8-45
29	실린더상부핀	CYLINDER ROD SHAFT	2	Ø20x158L	J03E08C	J0278000
30	스냅링	CIRCLIP	6	CS20		SN-CS20
31	유압호스(S)	HYDRAULIC HOSE(S)	2	1/4"x1Wx430LxSTxST	J03E09C	J0461200
32	잭익스텐션제관품(1)(52G/P,53G)	JACK EXTENSION(1)(52G/P,53G)	2		J03F30D	J0320100
33	잭익스텐션제관품(2)(52G/P,53G)	JACK EXTENSION(2)(52G/P,53G)	2		J03F30D	J0320200
34	육각볼트	HEX BOLT	6	M6x10L		HEXM0610
35	잭이탈방지판	PREVENT PLATE LEAVE THE JACK	4	3.2tx50x88.2x100	J03F32B	J0180025
36	자동로울러사각봉제관품(52F)	ROLLER SQUARE BAR(52F)	8			J0180035
37	육각볼트	HEX BOLT	8	M8x40L		HEXM0840
38	스프링와샤	SPRING WASHER	8	M8		WSM08
39	평와샤	PLAIN WASHER	8	M8		WPM08
40	스냅링(E-링)	E-RING	8	E-8		SN-E08
41	평와샤	PLAIN WASHER	8	M10		WPM10
42	자동이송로울러(52F/G/P,53G)	TRANSPORT ROLLER(52F/G/P,53G)	8	Ø30x23L	J03F38D	J0180070
43	베어링(니들로울러)	BEARING(NEEDLE ROLLER)	8	Ø10xØ14x15B		NRB101415B
44	자동로울러스프링	ROLLER SPRING	8	Ø14xØ2.5x24Lx6C	J06F08B	J0200010
45	1번링크제관품	LINK 1	2		J03G00C	J0221000
46	상,하부로울러	ROLLER	8	Ø52x20L	J03G04A	J0288100
47	DU베어링	DU BUSHING	8	DU2520		DU2520
48	상부롤러핀	UPPER ROLLER SHAFT	2	Ø25x201L	J03G06A	J0279000
49	2번링크제관품	LINK 2	2		J03H00C	J0231000
50	하부롤러핀	BOTTOM ROLLER SHAFT	2	Ø25x235L	J03H04A	J0280000
51	링크중간핀	LINK CENTER SHAFT	2	Ø28x195L	J03H05E	J0281000
52	스냅링	CIRCLIP	4	CS28		SN-CS28
53	안전스톱퍼제관품	SAFETY STOPPER	2		J03I00D	J0270100
54	무두렌치볼트	SET SCREW	2	M6x10L		MWBM0610
55	안전스톱퍼축제관품	SAFETY STOPPER SHAFT	2		J03I00D	J0272100
56	강구	STEEL BALL	2	3/8"(Ø9.51)		BALL-3/8
57	OVAL GRIP(긴볼,신주너트)	OVAL GRIP	2	Ø25x58LxM8		J0200030
58	레바고정용스프링	LEVER STOP SPRING	2	O.DØ9xØ1x38Lx12.5C	J03I07B	J0200020
59	받침고무	SUPPORT RUBBER	8	35tx160x100		33J70040

16(Hydraulic hose)

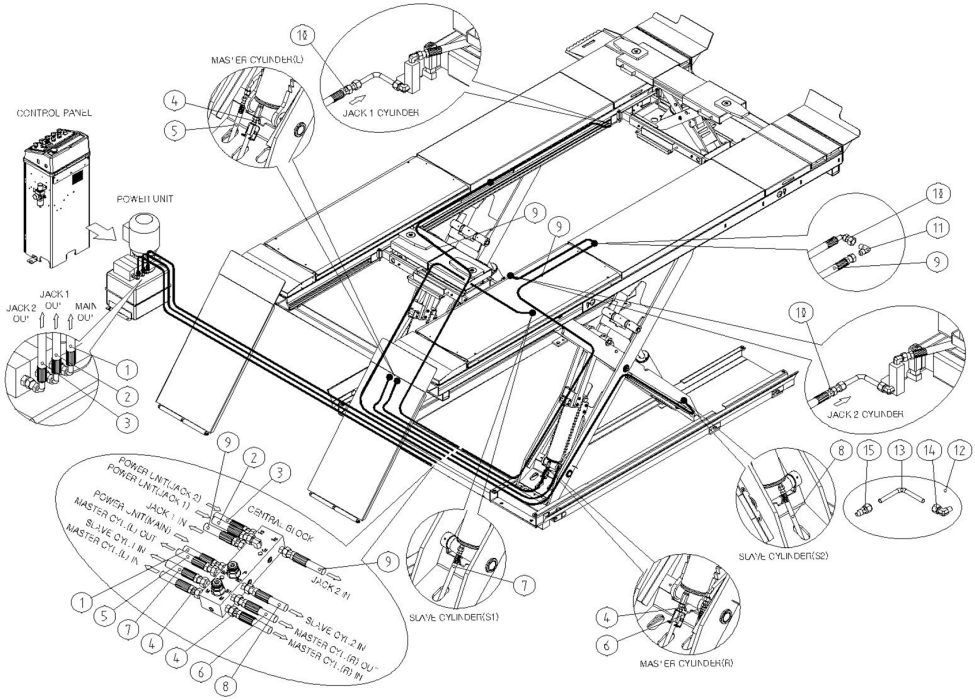

번호	품명(한글)	품명(영문)	수량	규격	도번	품번
NO.	PART NAME	PART NAME	Q'TY	SPECIFICATION	DWG.NO.	ITEM NO.
1	유압호스2번(금)	HYDRAULIC HOSE 2(GOLD)	1	5/16"*1W*9000L*EL*ST	52XQ31A/53XQ31A	52G40210
2	유압호스2번(은)	HYDRAULIC HOSE 2(SILVER)	1	5/16"*1W*9000L*EL*ST	52XQ31A/53XQ31A	52G40210
3	유압호스2번(흑)	HYDRAULIC HOSE 2(BLACK)	1	5/16"*1W*9000L*EL*ST	52XQ31A/53XQ31A	52G40210
4	유압호스4	HYDRAULIC HOSE 4	2	5/16"*1W*1100L*ST*ST.	52XQ31A/53XQ31A	52X0Q014
5	유압호스5	HYDRAULIC HOSE 5	1	5/16"*1W*1200L*ST*ST.	52XQ31A/53XQ31A	52X0Q015
6	유압호스6	HYDRAULIC HOSE 6	1	5/16"*1W*1200L*ST*ST.	52XQ31A/53XQ31A	52X0Q016
7	유압호스7	HYDRAULIC HOSE 7	1	5/16"*1W*3550L*ST*ST.	52XQ31A/53XQ31A	52X0Q017
8	유압호스8	HYDRAULIC HOSE 8	1	5/16"*1W*3550L*ST*ST.	52XQ31A/53XQ31A	52X0Q018
9	유압호스4번(S)	HYDRAULIC HOSE 4(S)	2	5/16"*1W*3750L*ST*ST	52XQ31A/53XQ31A	52G40400
10	유압호스5번C/B	HYDRAULIC HOSE 5(C/B)	2	1/4"*1Wx2300L*ST*EL/2500L	52XQ31A/53XQ31A	52G40500/53G40500
11	철니플(엘보)유니온	STEEL NIPPLE(EL)UNION	2	O5U 엘보		HME-02G
12	잭연결용파이프조립품	JACK CONNECT PIPE ASS'Y	2		52XQ35A/53XQ35A	52X0Q250
13	유압파이프	HYDRAULIC PIPE	2	^10*80*80	52XQ35A/53XQ35A	52G70025
14	멜엘보(BLM10-02R)	MALE ELBOW(BLM10-02R)	2	^10*PT1/4		BLM10-02R
15	멜호스유니온	MALE HOSE UNION	2	^10*1/2-20UNF		BHUM10-02G

17(Air line)

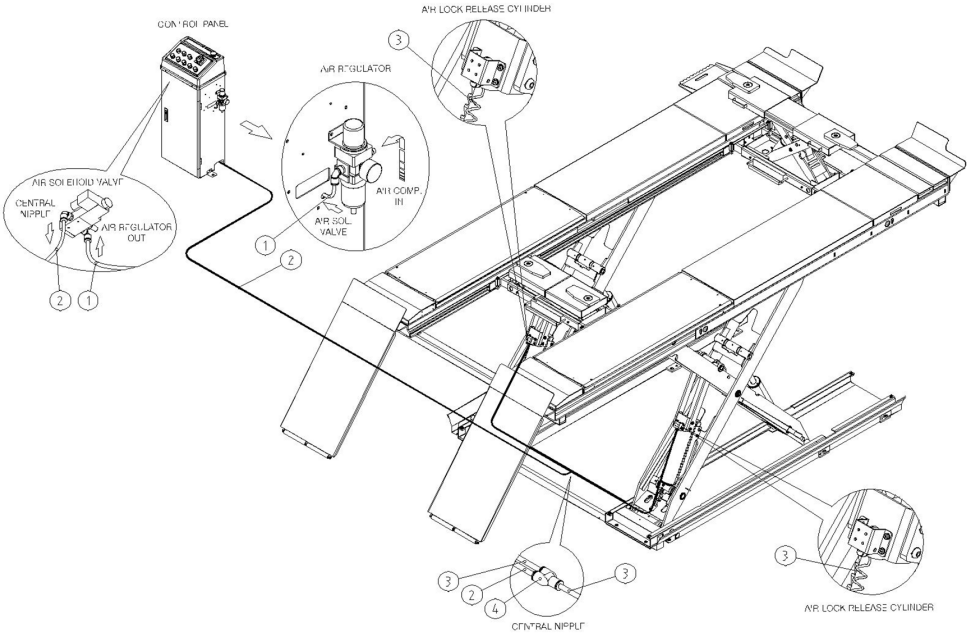

번호	품명(한글)	품명(영문)	수량	규격	도번	품번
NO.	PART NAME	PART NAME	Q'TY	SPECIFICATION	DWG.NO.	ITEM NO.
1	에어호스-1	AIR HOSE-1	1	^6*^4*800L/350L	52XO10A/53XO10A	
2	우레탄에어호스(흑색)	URETHANE AIR HOSE(BLACK)	1	^4*^2.5*7000L	52XO10A/53XO10A	AH04025
3	코일에어호스(흑색)	COIL AIR HOSE(BLACK)	2	^4*1000L*50L*^26	52XO11A/53XO11A	33X05250
4	원터치공압니플(Y)	ONE TOUCH AIR NIPPLE(Y)	1	^4*^2.5*Y		EC425Y

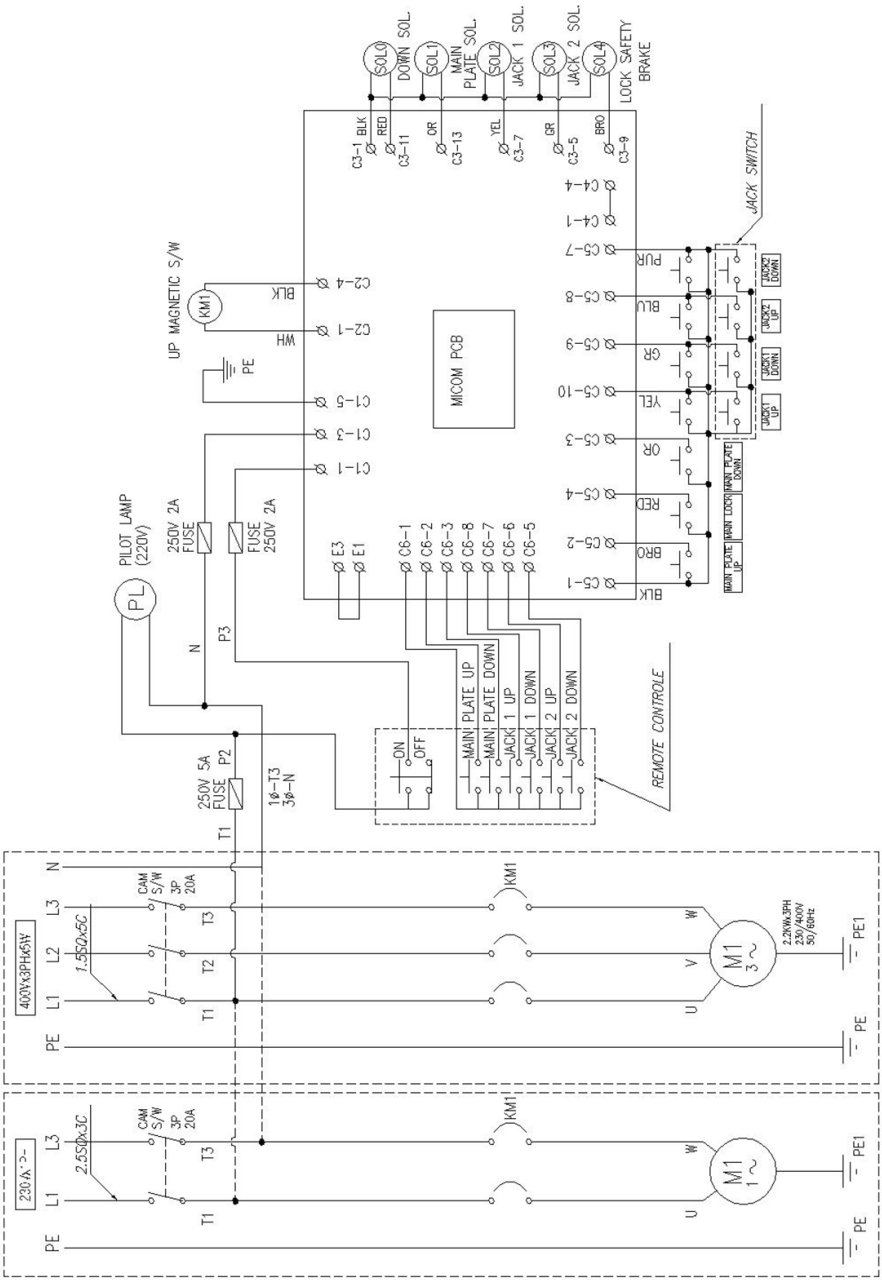
SOL0
DOWN SOL.
SOL1
MAIN PLATE SOL.
SOL2
JACK 1 SOL.
SOL3
JACK 2 SOL.
SOL4
LOCK SAFETY BRAKE
C3-1 BLK
C3-11 RED
C3-13 GR
C3-7 YEL
C3-5 GR
C3-9 BRO
C4-4
C4-1
C5-7 PUR
C5-8 BLU
C5-9 GR
C5-10 YEL
C5-3 OR
C5-4 RED
C5-2 BRO
C5-1 BLK
JACK SWITCH
JACK2 DOWN
JACK2 UP
JACK1 DOWN
JACK1 UP
MAIN PLATE DOWN
MAIN LOCK
MAIN PLATE UP
UP MAGNETIC S/W
KM1
C2-4 BLK
C2-1 WH
PE
MICOM PCB
C1-5
C1-3
C1-1
PILOT LAMP (220V)
PL
250V 2A FUSE
FUSE 250V 2A
N
P3
E3
E1
C6-1
C6-2
C6-3
C6-8
C6-7
C6-6
C6-5
MAIN PLATE UP
MAIN PLATE DOWN
JACK 1 UP
JACK 1 DOWN
JACK 2 UP
JACK 2 DOWN
ON
OFF
REMOTE CONTROLE
250V 5A FUSE
P2
1Ø-T3
3Ø-N
T1
400V×3PH×5W
L1
L2
L3
N
PE
1.5SQ×5C
CAM S/W
3P 20A
T3
T2
KM1
W
V
U
M1
3~
2.2KW×3PH
230V/400V
50/60HZ
PE1
230V×3~
2.5SQ×3C
M1
1~

19(Electric circuit-53X)

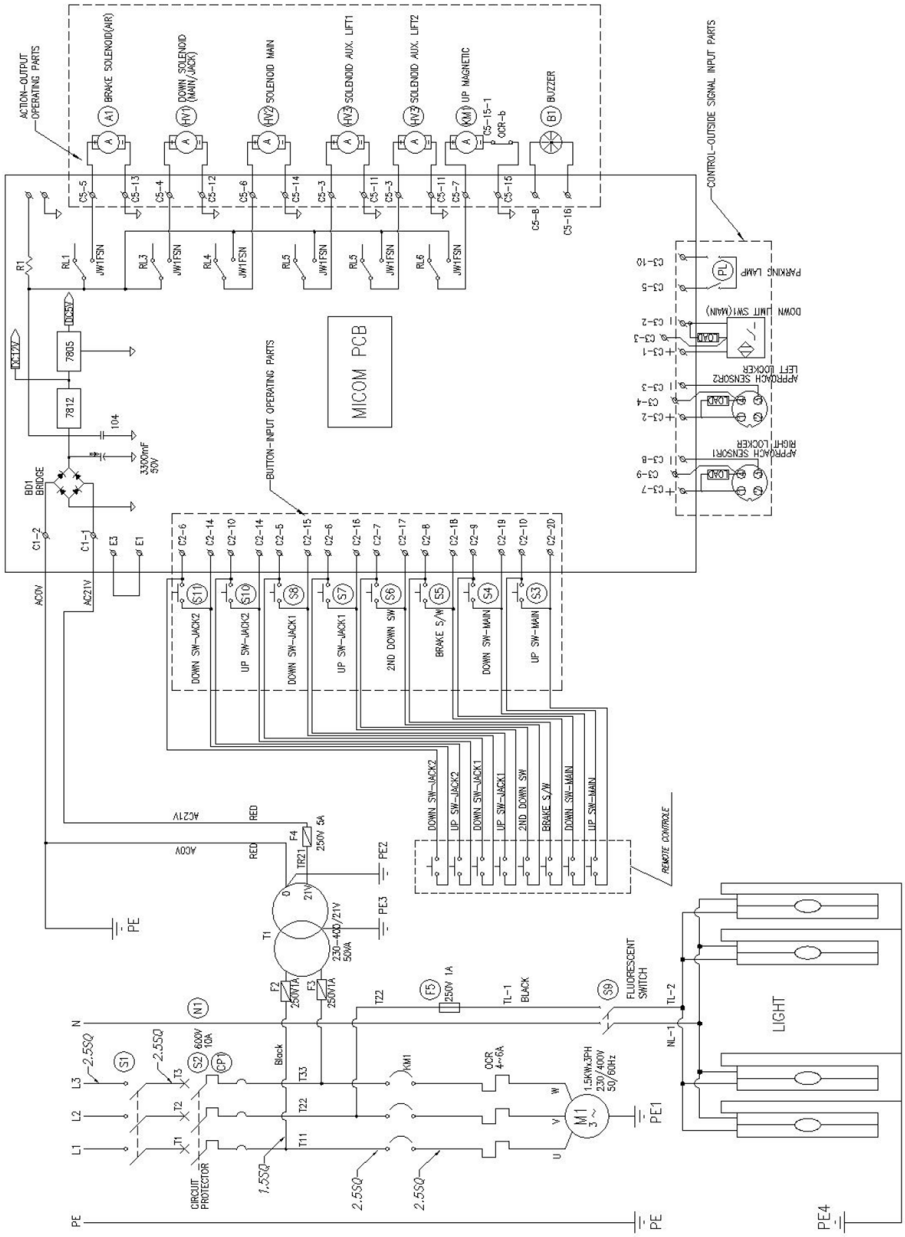

20(Hydraulic circuit-52X)

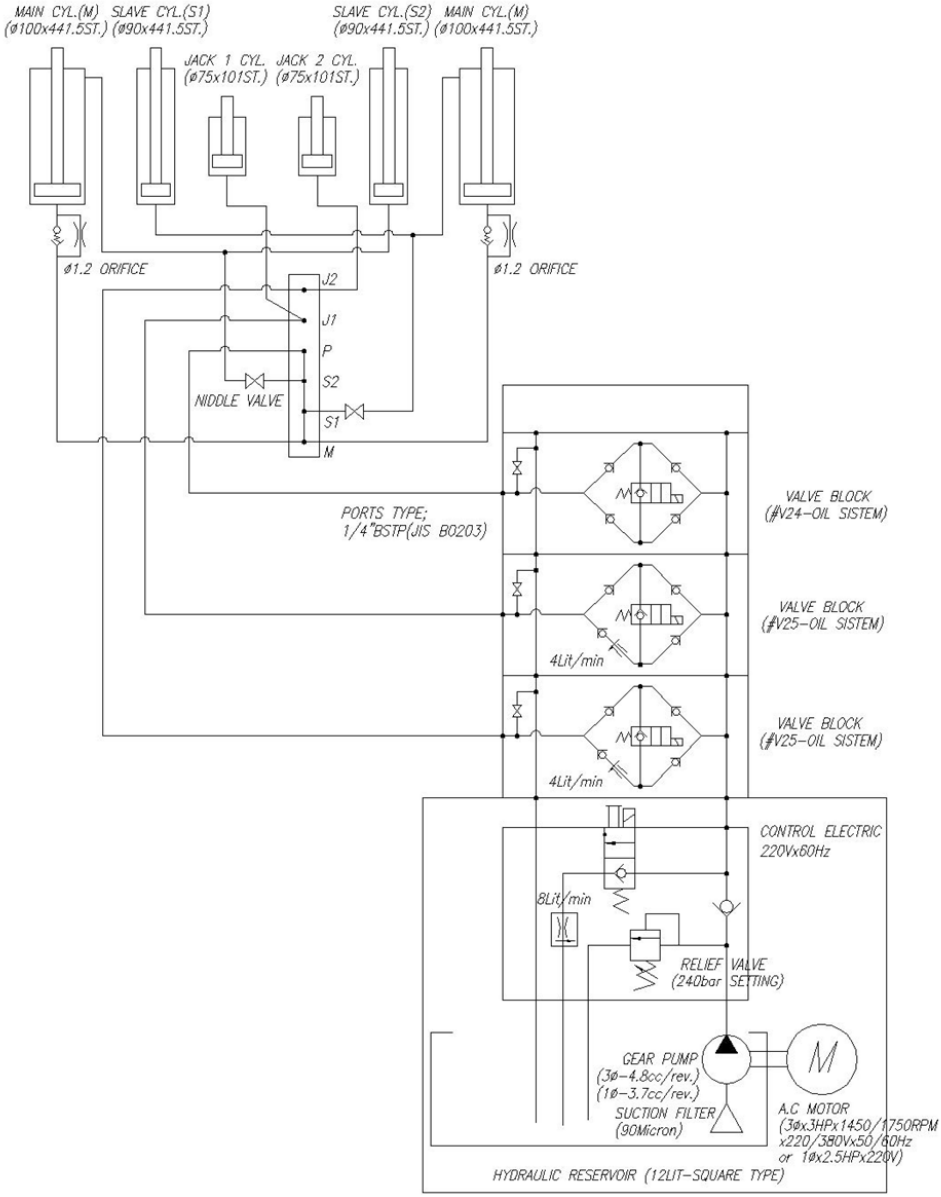

21(Hydraulic circuit-53X)

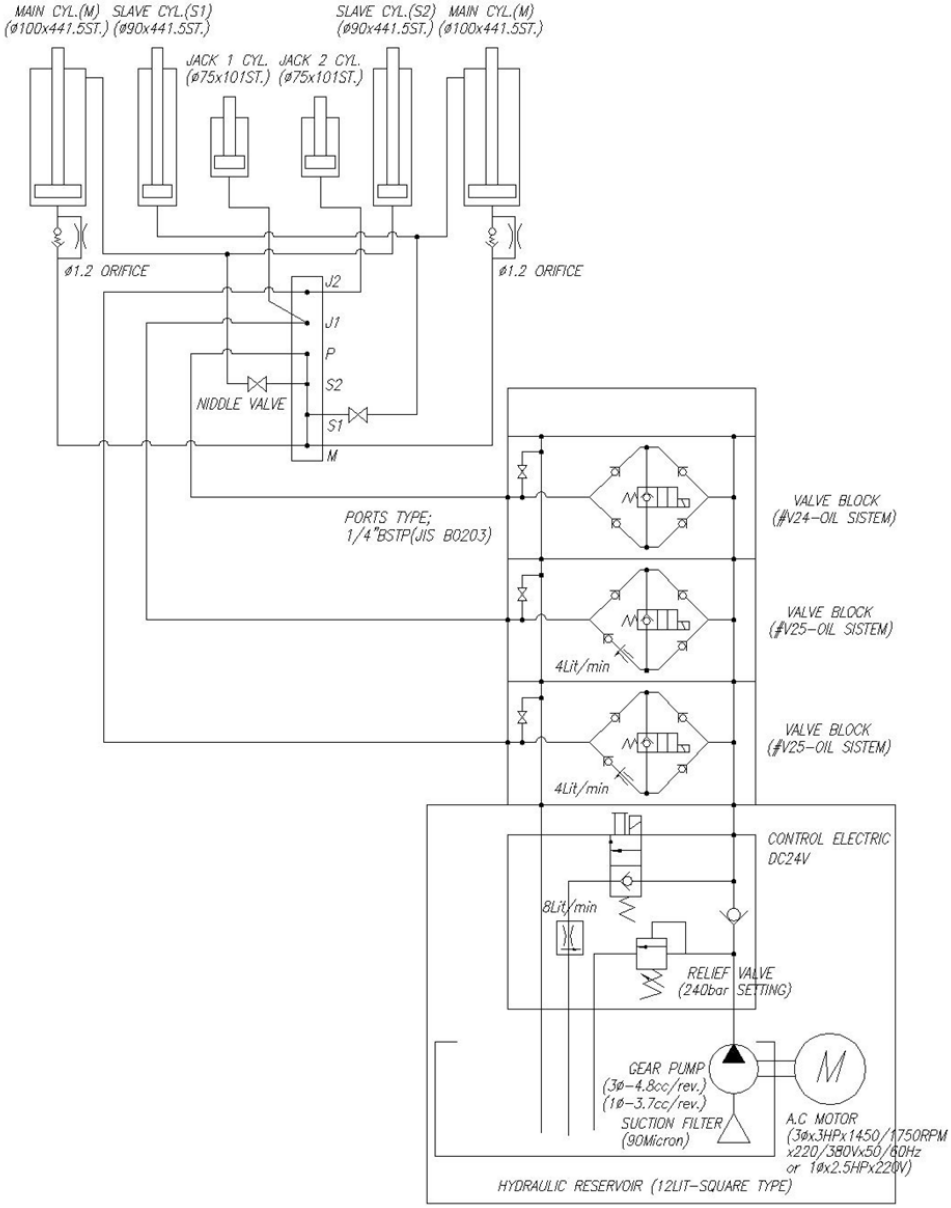

22(Pneumatic circuit-52X)

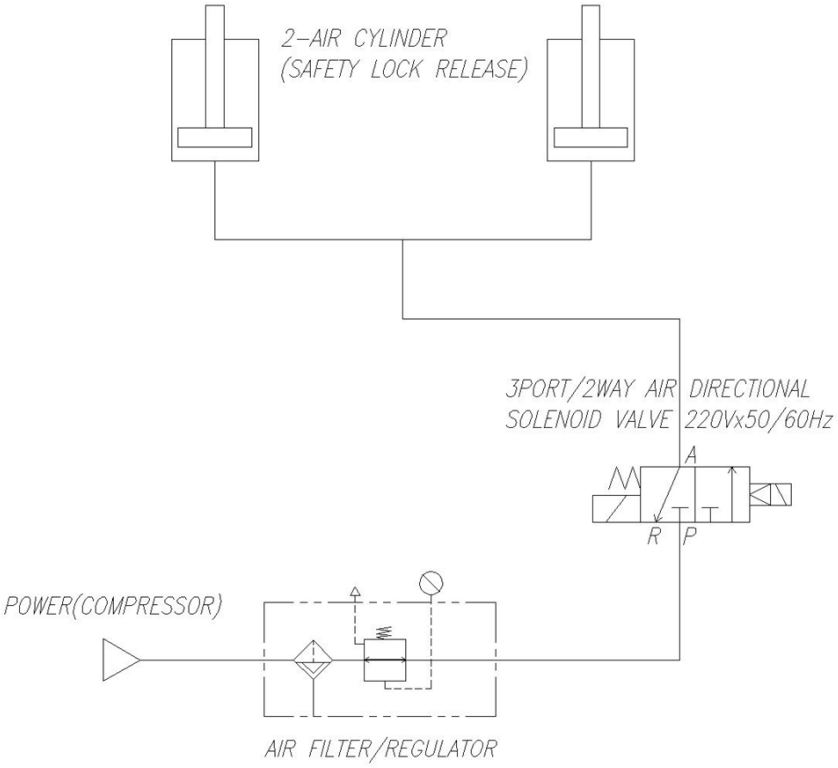

23(Pneumatic circuit-53X)

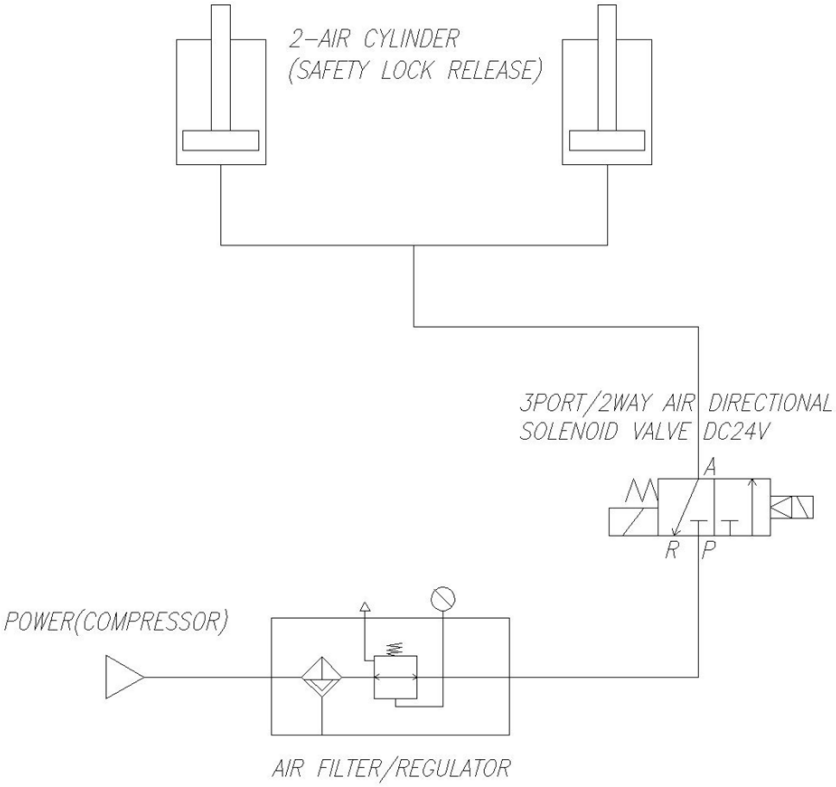

HESHBON®

HESHBON CO.,LTD.
673-52, GYEONGSEO-DONG, SEO-GU, INCHEON, 404-170 KOREA
TEL:+82-32-585-3570(Overseas Sales Dept.) / FAX: +82-32-585-3535
http://www.heshbon.com / e-mail:export@heshbon.com